Operation Instruction Manual

WSD-30C

Animal Temperature Controller
Version 1.1
Auber Instruments
5755 North Point Parkway, Suite 99
Alpharetta, GA 30022
770-569-8420
www.auberins.com
Dec, 2016

Introduction

WSD-30C is a PID controller with dual sensor for animal research. It allows the researcher to maintain the animal's body temperature at specific value while recording signal that they are interested in. It should be used with AC powered heating pad. It is supplied with a rectal probe (sensor 1) and a chip sensor for heating pad (sensor 2).The shank of the sensor 1 is 2.0 mm in diameter. The tip has a 3.0 mm barb for holding the probe in the animal. It is suitable for both mice and rat. The sensor 2 is a 2 x 2 mm chip that is to be mounted to a heating pad. Sensor 2 can be used to limit the maximum surface temperature of the pad so that animal will not be burned due to hot surface. The setting for the maximum surface temperature limit can be adjusted and viewed by the user. It increases the flexibility of the system to fit different experiment requirements.

In addition to the standard operation mode for animal temperature control, this controller can also be used as single sensor controller for other research projects. For example, using the sensor 1, it can be used for controlling the temperature of liquid in a beaker. Using the sensor 2, it can be used as incubator controller to maintain a heating pad at a specific temperature. These options are controlled the Sensor Operation Mode parameter. For details, please see page 8.

Specifications

Input voltage	100 to 240 VAC 50 /60 Hz
Output voltage	Same as input voltage
Controller Mode	PID
Output switching device	Built-in optically isolated solid state relay
Rectal probe dimensions	2 mm diameter x 30 mm long.
Probe cable length	1.2 meter
Temperature resolution	0.1 °C

Temperature display range	0-50 °C
Mini. Control Temperature	5 °C above ambient.
Max. Control Temperature	50 °C.
Temperature accuracy	+/- 0.1°C (in 25-40 °C range)
Dimension	6x3x8.3 inch (155 x80x210 mm) WxHxD.
Weight	3.2lb (1.4 kg).
Maximum Output Power	10Amp for 110V or 220V AC
Warranty	1 year for controller. 90 days for sensor

Operating Instructions

1. Description of the controller.

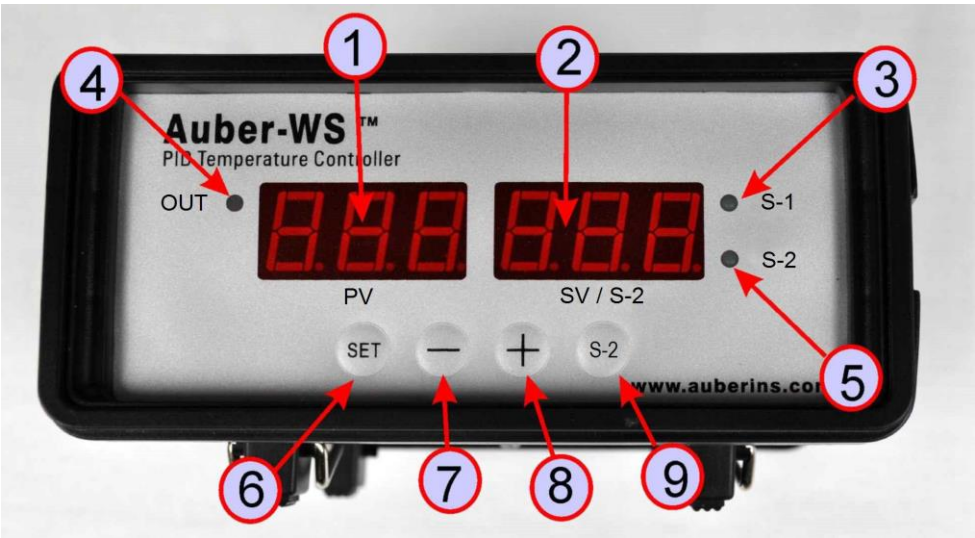

Figure 1. Front Panel

1) **PV, Left window** - During normal operation, it displays the reading temperature of sensor 1. When high or low limit alarm of sensor 1 is on, this window will flash between the alarm type (AH1or AL1) and the temperature. In the parameter setting mode, it displays the controller's system parameters.
2) **SV/S-2, Right window** - During normal operation, it displays the Set temperature, or the surface temperature of heating pad. When high limit alarm of sensor 2 is on, this window will flash between AH2 and the temperature. In the parameter setting mode, it displays the value of the parameter.
3) **S-1 mode indicator.** This indicator lit when the controller is set to S-1 mode: using sensor 1 as the only sensor for control. For details, please see page 8.
4) **Output status indicator** - This LED indicates the output status that should be synchronized with heater. When it is on (lit), the heater is powered. When it is off, the heater power is off. When it is flashing, it means the heater is on and off

intermittently to reduce the power output. It should be synchronized with the power light on the heating device.

5) **S-2 indicator**- In default mode, when lit, the right window shows the temperature of the sensor 2. When it is off, right window shows set temperature of the rectal sensor 1. When the controller is set to S-2 mode, this indicator will stay on, regardless if the S-2 key is pressed or not. For details, please see page 8.
6) **SET Key** - For showing current temperature settings, getting into parameters setting mode and confirming various actions taken.
7) **"-" Key** - To decrease displayed value when controller is in the parameter setting mode. During normal operation, press it to cancel the alarm.
8) **"+" Key** - To increase displayed value when controller is in the parameter setting mode.
9) **S-2 Key** - Change the display in right window between set temperature of the sensor 1 and the actual temperature of the sensor 2.

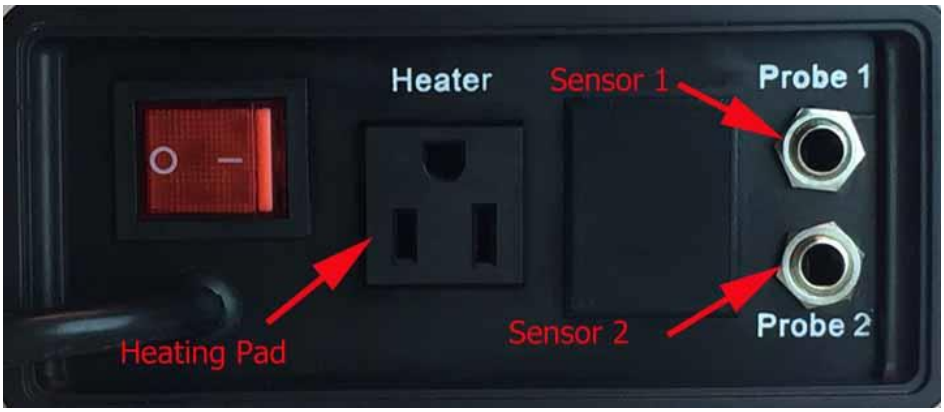

Figure 2. Back Panel

2. Connecting and operating the controller

Connect the power cable of the controller directly to the wall outlet. Connect the controller output to the heating pad. Connect the sensors to the sensor sockets. Insert the sensor 1 into the subject to be controlled.

3. Programming the temperature

There are two temperature parameters to be set: C01 is the set value for the temperature at the sensor 1. Controller will regulate the heating power so that the probe temperature is maintained at the set value C01. C02 is the set value for the maximum temperature allowed at the heating pad surface (sensor 1). It prevents the heating pad from getting too hot to hurt the animal.

For example, C01=37.0, C02=40.0. When heating starts, both the probe and heating pad read 20.0. The controller sends power to the heating pad to warm up the system. But if the heating pad reached 40.0°C before the probe reaches 37.0°C, the heater will start to turn down so that heating pad is kept not over 40.0 degree.

To set the temperature, press SET key once. The display will show C01 at the left window and temperature setting on the right window for step 1. Use “+” and “-” keys to change the setting. When finished, press the SET again to confirm the change. The display will show C02 on the left window and the temperature setting on the right window. Use “+” and “-” keys to change the setting. When finished, press the SET again to confirm the change. The temperature setting will not be changed if SET is not pressed (confirmed). After set C02 the display will return to the normal display mode.

Table 1. Initial program setting

Sensor	Description	Temp (°C)
C01	Probe temp set point (0-50.0°C)	37.0
C02	Heating pad maximum temp limit. (0-50.0°C)	40.0

4. Check the heating pad temperature

When controller is running, pressing the "S-2" key (9) will switch the right window from displaying the probe set temperature to the actual temperature of the heating pad. The "S-2" LED indicator (5) will lit also. Press it again to switch back to the probe set temperature.

5. Tuning the controller

The PID parameter of this controller is preset for the heating pad that shipped with the controller. If you feel that performance is not ideal, you can try to manually tune the system or run auto-tune again. For detailed information on how to tune the controller, please read the section 7 and 8 for tuning the controller.

6. Controller Parameter set up.

The controller parameters are divided into three groups.

1) The first group of parameters are related to the control performance. They need to be adjusted based on the system to be controlled. Table 2 shows the list of these

parameters, their ranges and initial set values when left the factory.

Table 2 List of control parameters and its initial settings under code 166

Symbol	Display	Description	Range	Initial
P	P	Proportional band (degree)	0-600	7
I	I	Integral constant (second)	0-900	600
d	d	Derivative constant (second)	0-300	150
AT	AT	Auto-tune	0=off 1=on	0
T	t	Cycle rate (second)	1-100	2
HY1	HY1	Hysteresis band for probe	0.1-60.0	0.1
HY2	HY2	Hysteresis band for heating pad	0.1-60.0	0.5

Details about each parameter

- P. Proportional band. It is in 1 degree units. This parameter controls the output of the controller based on the difference between the measured and set temperature. Larger P number means weaker action (lower gain), e. g. If P=10.0, the proportional band is 10 degrees. When the sensor temperature is 10 degrees below the proportional band (10 degrees below the setting), the controller will have 100% output. When the temperature is 5 degrees below the set point, the output is 50%. When the temperature is equal to the setting, the controller will have 0% output (assuming integral and derivative functions are turned off). This constant also affects both integral and derivative action. Smaller P values will make both integral and derivative actions stronger.
- I. Integral time. The unit is in seconds. This parameter controls the output of controller based on the difference between the measured and set temperature integrated with time. Integral action is used to eliminate temperature offset. Larger number means slower action. e. g. assuming the difference between the measured and set temperature is 2 degrees and remain unchanged, the output will increase continuously with time until it reaches 100%. When temperature fluctuate regularly (system oscillating), increase the integral time. Decrease it if the controller is taking too long to eliminate the temperature offset. When I=0, the system becomes a PD controller. For very slow response system such as slow subject and large subject, set I = 0 will significantly reduce the temperature overshoot.
- d. Derivative time. The unit is in seconds. Derivative action contributes the output power based on the rate of temperature change. Derivative action can be used to minimize the temperature overshoot by responding its rate of change. The larger the number is, the faster the action will be. The derivative action change the controller output based on the rate of change rather than the net amount of change. This will allow the controller to act sooner. It will turn the heater to full power before the temperature drops too much

- AT. Auto-tune function. Set AT to 1 then exit the menu. The display will start to flash alternately between AT and the current water bath temperature, which indicates auto-tuning is in progress. When the display stops flashing, the auto-tuning is finished. Now, the newly calculated PID parameters are set and are used for the system. The new parameters will store in the memory even the power is off. For more information about auto-tune, please see section 8
- T, cycle rate. The unit is second. This unit determines how long for the controller to calculate each action. e.g. If T is set to 10 seconds, when controller decide the output should be 10%, it will turn on the heater 1 second for every 10 seconds. This parameter should set at 2 second for heating with an electric heater.
- Hy1 is the hysteresis band for the probe setting when controller is set to on/off mode (P=0). This parameter is not used in the normal PID mode.
- Hy2 is the hysteresis band for the heating bad. If the heating pad is set at C02. The heater will turn off at C02 and turn on again when temperature drop to C02-Hy2. For example, it the heating pad maximum temperature is set at 40 degrees and Hy2 is set at 0.5, the heater will shut off when heating pad is reached 40.0 degree and turn on again when temperature dropped to 39.5 degree.

To prevent changing critical parameters by accident, an access lock, LCK is used. Special code is needed to open the lock for these parameters.

This group of parameters is accessed by input code 166. Figure 3 is the flow chart that shows how they can be changed.

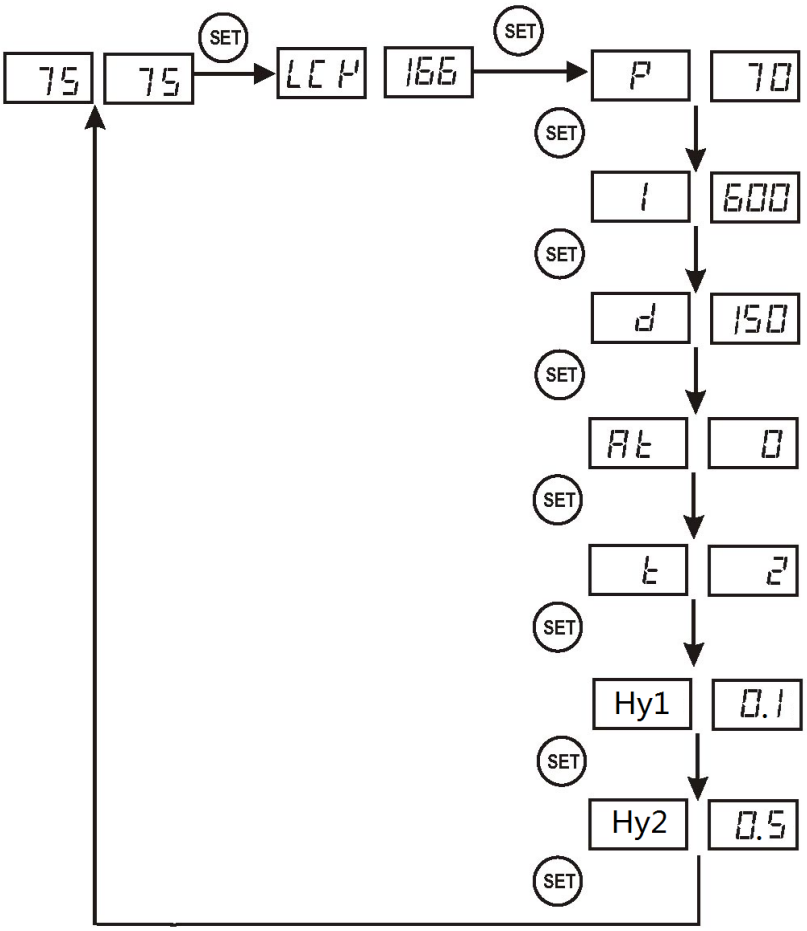

Figure 3. Code 166 Parameter setup flow chart

Press and hold SET key for 4 seconds until LED display “LCK” on the left window, then release the SET key. The display on the right window will show “0”. To get into parameters setting mode, you need to key in the pass code. Use “+” and “-“keys to adjust the display to 166 (which is the pass code) and press SET. The left window will display “P” and right window is P setting value, Use “+” and “- “key to change the setting. When finished, press the SET again to confirm the change. The left display will show the “I “right window has its setting value, use the same “P” setting procedure to set the I value. The rest of parameters are set in the same way.

2) The second group is about the system configuration and set up. Once they are set, they normally do not need to be changed. This group of parameters can be accessed by input code 155. If you don’t want your system be altered by other person, do not let other people know this code. Table 3 shows the list of the parameters, their range and initial set value when left the factory.

Table 3. List of control parameters and its initial settings under code 155

Symbol	Display	Description	Range	Initial
SC1	SC1	Probe sensor offset (in degree)	-19.9~+20.0	0
SC2	SC2	Heating pad sensor offset (in degree)	-19.9~+20.0	0
Out	OUt	Output power reduction (%)	1-100	100
Mod	Mot	Sensor operation Mode	dFt,S-1,S-2	dFt

Details about each parameter.

- SC, calibration offset. The parameter is used to make the input offset to compensate the error produced by sensor. e.g. if the temperature displays of probe is 1.0 °C higher than a calibrated thermometer, set SC=-1.0 will make the display match the calibrated thermometer. SC1 is for the temperature probe. SC2 is for the sensor in the heating pad.
- Out, Output power reduction. It is expressed as a percentage value. This function will allow you to control the maximum output power delivered by the heater. For example, if you set Out=50 and your heater is 30 watts, the output will use 50% of the 30 watts as the full output. It makes the 30 W heater as a 15W heater. When the PID algorithm determines 20% output value, the actual power output will be 3 watts. This function is only useful when a heater wattage is too high for the subject to be controlled.
- Mod. Sensor operation mode. This controller offers three sensor operation modes: default (dFt) that requires both sensor plugged in; sensor 1 only, (S-1); and sensor 2 only, (S-2).

  The default mode is for using the rectal probe (sensor 1) to control the temperature, and using the second sensor in the heating pad as a boundary criterion so that the pad does not get too hot to burn the animal.

  The S-1 mode does not use the second sensor as a boundary criterion. Since only one sensor is used for the operation, heating pad without embedded sensor can be used. This mode should not be used for keeping the animal warm. In this mode, S-2 key is disabled, S-1 indicator stays on.

  The S-2 mode is for controlling the heating pad surface at a specific temperature. It does not require the rectal probe to operate. In this mode, the left window displays the actual temperature of the heating pad, the right window displays the set temperature of the heating pad. S-2 key is disabled. S-2 indicator stays on.

This group of parameters is accessed by input code 155. Figure 4 is the flow chart that

shows how they can be changed.

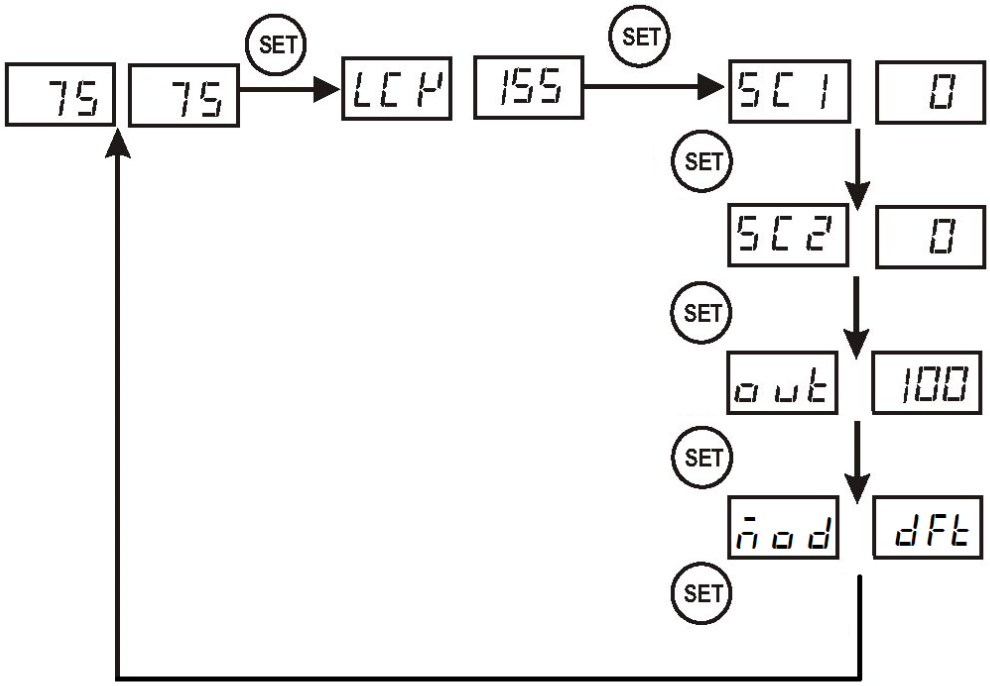

Figure 4. Code 155 Parameter setup flow chart

Press and hold SET key for 4 second until left window displayed “LCK”. Release the SET. The right window will show “0”. Use “+” and “-” keys to adjust the display to 155 (another pass code) and press SET. The left window will show the parameter and right window will show its value. Use “+” and “- “key to change the setting. When finished, press the SET to confirm the change. The next parameter will be displayed.

3) The third group is about the alarm. The alarm setting can be accessed by code 188. Table 4 shows the list of the parameters, their range and initial set value when left the factory.

Table 4. List of control parameters and its initial settings under code 188

Symbol	Description	Range	Initial
AH1	Probe high limit alarm	0-99.9 °C,	40.0
AL1	Probe low limit alarm	0-99.9 °C,	0
AH2	Heating pad high limit alarm	0-99.9 °C,	40.0

Detail of each parameter.

a) AH1, this is the high limit alarm for probe 1. User can set the temperature so that if the system is out of control, the buzzer will be turned on. e.g. If AH1 set to 38.0, the buzzer will be on at 38.0 and off at 37.0. When the buzzer is on, the left widow will flash between AH1 and the current temperature.

b) AL1 is the low limit alarm for probe 1. e.g. If AL1 is set to 25. The buzzer will be on when temperature drop to 25. It will be turned of when temperature rise to 26. This alarm is suppressed when first powered up. It will only function after the temperature has reached set point once. When the buzzer is on, the left widow will flash between AL1 and the current temperature.

c) AH2 is the high limit alarm for the heating pad. If AH2 set to 41, the buzzer will be on at 41 and off at 40. When the buzzer is on, the right widow will flash between AH2 and the current temperature.

Note: **All alarm can be cancelled during beeping by press the "-"key.**

This group of parameters is accessed by input code 188. Figure 5 is the flow chart that shows how they can be changed.

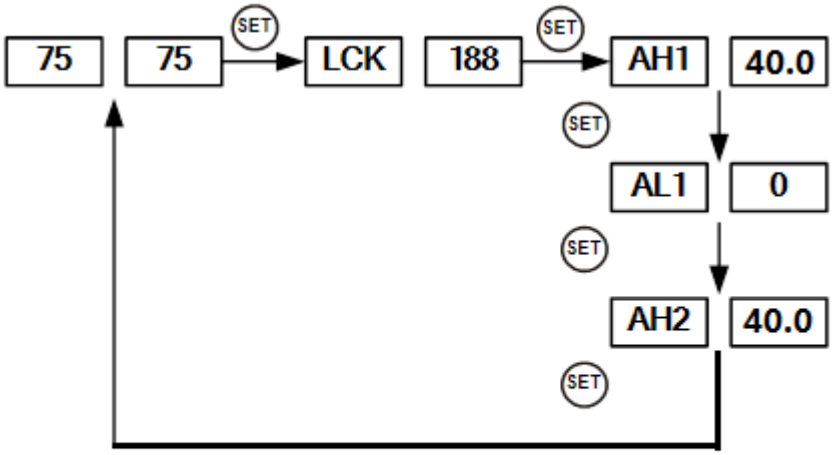

Figure 5. Code 188 Parameter setup flow chart

Press and hold SET key for 4 second until left window displayed "LCK". Release the SET. The right window will show "0". Use "+" and "-" keys to adjust the display to 188 (pass code) and press SET. The left window will show the parameter and right window will show its value. Use "+" and "-" keys to change the setting. When finished, press the SET to confirm the change. The next parameter will be displayed.

7. Auto-Tune

The controller's most powerful feature is its ability to regulate virtually any subject with stable temperature control. For stable temperature control the controller requires two things; (1) the controller must be set to the correct power level (see next section) and, (2) that it must be *tuned* to the subject being used. Tuning is the process that matches the control characteristics of the controller to the heating characteristics of the subject. The controller is said to be tuned to the subject when its memory is programmed with values telling it how fast the subject warms up, cools off, and how efficiently it transfers heat. For example, consider the difference between a heat lamp and a hot plate. When electricity is applied to a heat lamp it begins to heat instantaneously, and when it's turned off it stops heating instantaneously. In contrast, a hot plate may take several minutes to begin heating when electricity is applied and even longer to start cooling when electricity is turned off. But, to do this it must be programmed with the time constants. Describing how fast the heater heats when electricity is turned on and how fast it begins to cool when it's turned off. These time constants are called the *tuning parameters.*

When Should the Controller be Tuned?

If the PID parameters we provided are not working for your liking, you can use the auto-tuning function to let the controller to determine the PID parameters automatically. Auto-tuning function (it’s often known as self-tuning) can automatically optimize the PID parameters for your system. The auto-tuning function will heat up your subject then let it cool down. It will repeat this heat/cool cycle several times. Based on the response time of the whole system, the controller will calculate and set the PID parameters for your subject. During auto-tuning, the temperature will overshoot. Therefore, user should use a dummy subject instead of a real subject because it can be damaged.

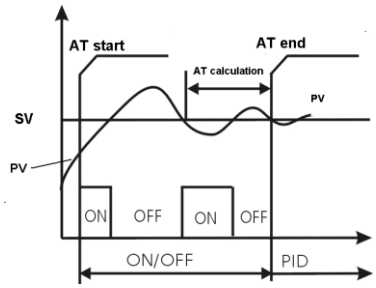

Figure 6. Auto-tune

To activate auto-tuning, just enter code 166 to get into the PID setting menu. Set At to 1 then exit the menu (see Figure 3). The display will start to flash alternately between AT and the current water bath temperature, which indicates auto-tuning is in progress.

When the display stops flashing, the auto-tuning is finished. Now, the newly calculated PID parameters are set and are used for the system. The new parameters will store in the memory even the power is off.

You should always write down your old PID parameters, before letting the controller to perform auto-tuning. This way if something goes wrong, you can always go back to your old PID parameters.

The duration of auto-tuning depends on how fast the system is responding to the heating and cooling cycle. If the temperature of the subject takes a long time to drop -when heater is off- the auto-tuning could be a very long tuning process. This is especially true with a well-insulated subject. The auto-tuning should be able to tune most of your chosen with fairly good result.

Warranty

Auber Instruments warrants this controller to be free from defects in material and workmanship for a period of one (1) year from the date of the original purchase when utilized for normal household use, subject to the following conditions, exclusions and exceptions. The sensor of the controller is warranted for 90 days.

If your appliance fails to operate properly while in use under normal household conditions within the warranty period, return the complete appliance and accessories to

Auber Instruments
5755 North Point Parkway,
Suite 99
Alpharetta, GA 30022

If the appliance is found by Auber Instruments to be defective in material or workmanship, Auber Instruments will repair or replace it free of charge. A dated proof of purchase may be required.

The liability of Auber Instruments is limited solely to the cost of the repair or replacement of the unit at our discretion. This limited warranty does not cover damage caused by misuse, abuse, negligent handling or damage due to faulty packaging or mishandling in transit. This warranty does not cover damage or defects caused by or resulting from damages from shipping or repairs, service or alterations to the product or any of its parts which have been performed by a repairperson or facility not authorized by Auber Instruments.

This warranty is available to the original purchaser of the unit and excludes all other legal and/or conventional warranties. The responsibility of Auber Instruments, if any, is limited to the specific obligations expressly assumed by it under the terms of the limited warranty. In no event is Auber Instruments liable for incidental or consequential damages of any nature whatsoever. Some states/provinces do not permit the exclusion or limitation of incidental or consequential damages and therefore the above may not apply to you.

This warranty gives you specific legal rights and you may also have other rights which vary from state to state or province to province.

*Important: Carefully pack item to avoid damage in shipping. Be sure to include proof of purchase date and to attach tag to item before packing with your name, complete address and phone number with a note giving purchase information, model number and what you believe is the problem with item. We recommend you insure the package (as damage in shipping is not covered by your warranty). Mark the outside of your package “ATTENTION CUSTOMER SERVICE”. We are constantly striving to improve our products and therefore the specifications contained herein are subject to change without notice.

Auber Instruments Inc.
5755 North Point Parkway, Suite 99,
Alpharetta, GA 30022
www.auberins.com
E-mail: info@auberins.com Tel: 770-569-8420
Copyright 2007-2016, Auber Instruments All Rights Reserved.
No part of this manual shall be copied, reproduced, or transmitted in any way without the prior, written consent of Auber Instruments. Auber Instruments retains the exclusive rights to all information included in this document.