Instruction Manual

JSL-75 General Purpose Timer with External Alarm Trigger

Version 0.91 (Nov, 2026)

1. Overview

The JSL-75 timer can count from 0.01 second to 9999 hours. Operating function modes include single delay, delayed interval, and cycle. It can count down or count up. This timer can be triggered by a regular external alarm from PID/PLC via EXT trigger terminal. It can also be triggered at power-up, by front key pad, or via remote switch.

The EXT terminal responds to the activation of an external alarm signal. Once triggered, the timer continues its timing process independently of the alarm signal. The alarm signal can subsequently return to its normal state without stopping, resetting, or interrupting the timer.

2. Specifications

Timer range: 0.01 seconds to 9999 hours.
Timer mode: Single Delay, Delayed Interval, Cycle.
Timer trigger: power on, front pushbutton, external switch, or external PID/PLC alarm
Timer accuracy: < 1 s/day.
Power supply: 90 - 260 V AC or DC.
Power consumption: less than 2 W.
Relay output type: SPDT (1 Form C), dry contact
Relay output rating: 7 A @ 240 VAC, 10 A @ 120 VAC and 24 VDC.
Average relay life: 100,000 times at rated current.
Operating temperature: 0 - 60°C.
Humidity: 0 - 95% RH.
Panel cutout: 44.5 x 44.5 mm.
Outer dimension: 48 x 48 x 85 mm.

3. Front Panel

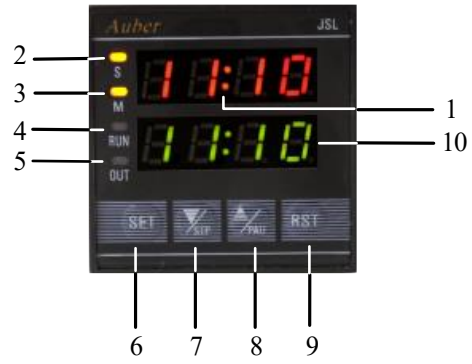

Figure1. Front panel of JSL-75 timer.

1. **Time Unit Indicator:** by default, the screen turns on when time format is MM:SS (Minutes: Seconds) or HH:MM (Hours: Minutes) and flashes when the timer is running; The screen turns off when time unit is M (Minutes) or S (Seconds).
2. **Timer Indicator for Seconds:** turns on when the time format is MM:SS or S; turns off when the time format is HH:MM or M.
3. **Timer Indicator for Minutes:** turns on when the time base is HH:MM or M; turns off when the time base is MM:SS or S.
4. **RUN Indicator:** turns on when the timer is running; blinks when timer is paused; turns off when timer is stopped.
5. **OUT Indicator:** turns on when relay is energized; turns off when relay is de-energized.
6. **SET Button**: press it momentarily to set T1 and T2 timer; press and hold it for 3 seconds to enter the programming mode. In programming mode, press it momentarily will go to the next parameter setting.
7. ▼ **Down / STP Button*:** This button reduces the value in the programming mode; when the timer is running, press it to stop the timer.
8. ▲ **Up / PAU Button:** This button increases the value in the programming mode; when the timer is running, pressing and holding this button pauses the timer. Once you release the Up button/ PAU button, the timer will resume.
9. **RST Button:** Reset and start the timer.
10. **Digital LED Display:** during normal operation as a timer, the top displays the actual time; the bottom displays the preset value; in programming mode, the top displays the parameter, and the bottom displays the parameter value.

*Note: STP button has a special feature when Single Delay mode (FUNC = SDL) **AND** when the Relay Output Mode is set to On Delay mode (OUT = ONDL). For details, see section 6.9.

4. Terminal Assignment

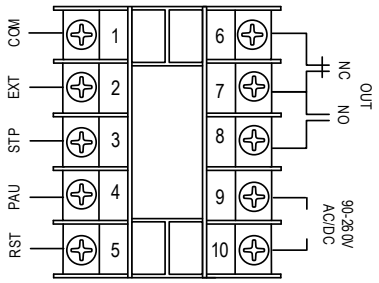

Figure 2. Terminal assignment of JSL-75.

Details on Terminals:

4.1. Terminal 1 is the COM. It is the COM pin for terminal 2, 3, 4, and 5. It serves as the signal reference (DC ground) for the low-voltage input terminals (Terminals 2, 3, 4, and 5).

4.2. Terminal 2 is the EXT input. The EXT input responds to the activation of an external alarm signal, such as external PID/PLC temperature alarms. Once triggered, the timer continues its timing process independently of the alarm signal. The alarm signal can subsequently return to its normal state without stopping, resetting, or interrupting the timer.

The EXT terminal carries a 5 VDC standby signal relative to the COM terminal. Connecting EXT to COM pulls the signal low to 0 VDC, creating a falling edge. Disconnecting EXT from COM allows the signal to return to 5 VDC, creating a rising edge. The RUN parameter determines which edge triggers the timer.

4.3. Terminal 3 is the STP input. The STP terminal carries a 5 VDC standby voltage. When connected to COM, the voltage is pulled down to 0 VDC, triggering the stop and reset action. Unlike EXT and RST, the STP input is not affected by the RUN parameter.
The timer's reactions to the front STP button and the STP terminal are slightly different. Press the STP button on the front momentarily will reset the timer to its original value and reset the relay output status to its initial state.

STP button and STP terminal may also be controlled by parameter STOP. For details, see section 6.9.

Table 1. Terminal Assignment.

Pin #	Function	Description	Details
Terminals 1 to 5 are low-voltage signal terminals (WARNING: Do NOT Apply External Voltage)			
1	Common	Common point for signal/control.	4.1
2	EXT	External trigger terminal (from the PID/PLC)	4.2
3	STP	Stop the timer when this terminal is connected to COM terminal.	4.3
4	PAU	Pause the timer when this terminal is connected to the COM terminal.	4.4
5	RST	Reset the timer when this terminal is connected to the COM terminal.	4.5
Terminals 6 to 10 are high-voltage terminals			
6	Relay Output	Normally closed contact.	4.6
7	Relay Output	Common point.	
8	Relay Output	Normally open contact.	
9	AC Power Input	90 ~ 260 VAC power input.	4.7

4.4. Terminal 4 is the PAU input. It functions the same as the "PAU" button on the front panel. This terminal carries a 5 VDC standby signal, and when it is connected to the COM terminal, the voltage is pulled down to 0 VDC, triggering the pause function. Unlike EXT and RST, the PAU input is not affected by the RUN parameter.

4.5. Terminal 5 is the RST input. It functions the same as the "RST" button on the front panel but offers additional configuration options. This terminal carries a 5 VDC standby signal, and when it is connected to the COM terminal, the voltage is pulled down to 0 VDC to initiate the reset action. The user can configure the input (parameter RUN) to respond to either a falling edge or a rising edge.

4.6 Terminal 6, 7, and 8 are contacts of a C-form relay output. Terminal 6 is normally-closed (NC) contact. Terminal 8 is normally-open (NO) contact. Terminal 7 is common contact of the terminal 6 and 8. When the relay is energized (or when the OUT LED is on), terminal 8 connects to terminal 7, and terminal 7 disconnects terminal 6; When the relay is de-energized (or when the OUT LED is off), terminal 6 connects to terminal 7, and terminal 7 disconnects terminal 8. The relay is a "dry contact" that does not provide power by itself. Please see the wiring examples in Section 7.

4.7. Terminal 9 and 10 are for power input. The power input for the timer needs to be connected to terminal 9 and 10. The voltage should be in the 90 to 260V AC/DC range, such as 120VAC or 230VAC.

4.8. External Alarm Trigger Input (EXT)

The EXT input (Terminal 2) allows the timer to be automatically started by an external alarm signal from a PID temperature controller, PLC, or other control device.
Unlike a conventional maintained start/stop signal, the EXT input responds to the transition of the external signal. Once triggered, the timer continues counting independently of the external signal. The external alarm can return to its normal state without interrupting or resetting the timer.

To prevent unintended restarting, additional EXT trigger signals are ignored while the timer is already running. To restart the timer during an active timing cycle, use the RST input (Terminal 5) or the front-panel RST button.

The trigger can be configured to respond to either a rising edge or a falling edge using the RUN parameter. This allows the timer to work with either normally open or normally closed alarm relay configurations, depending on the wiring.

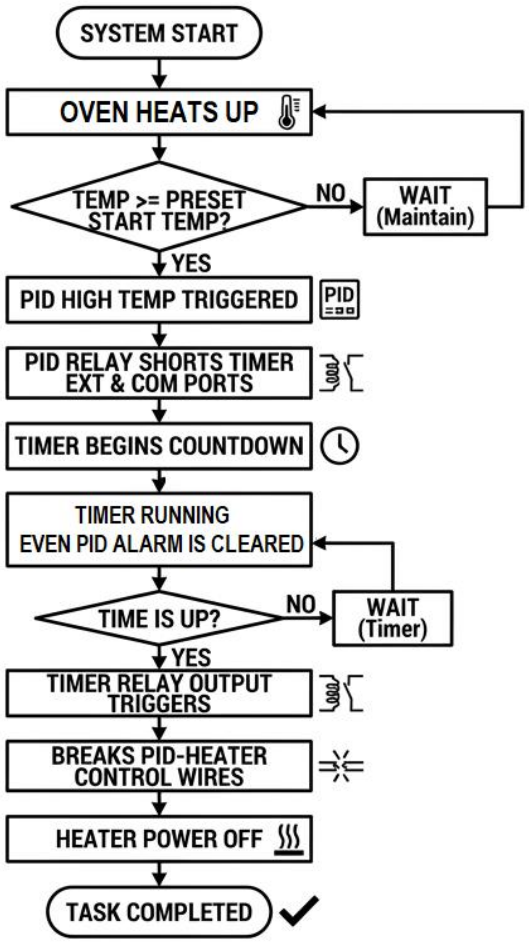

Figure 3. application flow chart using a regular PID with JSL-75 timer

Typically, a PID/PLC comes with more than one alarm relay output. For example, Auber SYL-2352 PID comes with one absolute high temperature alarm and one absolute low temperature alarm. High temperature alarm may still be useful so you can consider using the unused low temperature alarm to trigger this timer. For the wiring, you need to connect the temperature alarm

terminals (N.O.) from the PID to terminal 1 (COM) and terminal 2 (EXT) from the timer. When alarm is activated, Terminals 1 (COM) and 2 (EXT) will be connected so the timer will be started. When the timer is running (triggered by T2), it will not be triggered again by T2. Other terminals (T3, T4 and T5) are still functional.

If you use both alarms outputs at the same time, please note, you cannot send live voltage to T1 & T2 otherwise it will damage the controller. You may consider using an external relay to convert this live signal into the dry signal.

If you want to use the low temperature alarm as the high temperature alarm to trigger the timer, you can also use one external C-form relay (N.O. and N.C.) to reverse the signal. In this case, you also need to adjust the RUN parameter to switch between the falling edge trigger and a rising edge trigger.

For example, when using a normally open alarm relay from the PID that closes upon alarm activation, select RS-F (falling-edge trigger).

Table 2. EXT behavior table

Event	Timer Behavior
EXT activated while stopped	Starts timing
EXT activated while running	Ignored
EXT signal cleared while running	Continues timing
RST activated while running	Restarts timing
STP activated	Resets timing then stop
PAU activated	Pauses timing
Power interrupted, POM OFF	Resets then stop after power restoration
Power interrupted, POM ON	Resumes after power restoration

4.9. Regular Trigger Inputs (STP, PAU, RST)

There are two main ways to wire the input terminals STP, PAU, and RST (terminal 3, 4, and 5) to the COM terminal.

• Using Physical Switches

Connecting a normally open (NO) momentary push button switch between the Terminals 3, 4, and 5 to the COM terminal (1).

• Using an External Logic Signal

Instead of using a physical switch, you can also use an external logic signal to control the timer. Figure 7.3 shows a wiring example using an NPN transistor and a 10 kΩ resistor to interface the logic signal with the timer input.

4.10. Note on triggering actions on input terminals (2, 3, 4 and 5)

The terminal T2 (EXT) and T5 (RST) can be triggered by either a rising edge (low-to-high transition) or by a falling edge (high-to-low transition) depending on the setting of the RUN parameter. Terminal T3 (STP) and T4 (PAU) are not controlled by RUN. Hold the front PAU key, or keep shorting T4 to T1 terminal will pause the timer. Press the front STP key momentarily, or connect T3 to T1 terminal will stop & reset the timer.

4.11 Comparison between T2 and T5 trigger.

The EXT (T2) is designed for external alarm signals. Once the timer is started by an EXT trigger, subsequent EXT trigger signals are ignored while the timer is running. This prevents repeated alarm activation from restarting the timing process. The RST input provides manual or external control of the timer. Unlike the EXT input, an RST trigger can restart the timer even when it is already running.

When timer is not running, EXT and RST can both be triggered. When the timer is triggered by EXT and currently counting, it cannot be triggered again by EXT, but it can be triggered & restarted by RST. However, when the timer is triggered by RST and counting, it cannot be triggered again by EXT, but it can still be triggered & restarted by RST.

In conclusion, RST has higher priority than EXT. EXT can only be tripped when the timer is not running.

Table 3. T2 & T5 comparison

Function	EXT (T2)	RST (T5)
Start timer when stopped	Yes	Yes
Restart timer when running	No	Yes
Ignore repeated trigger while running	Yes	No
Trigger edge configuration	Yes	Yes
Typical Application	PID/PLC Alarm Trigger	Manual start/reset

5. Operation: How to set the time T1 and T2

Press the “SET” button momentarily, and T1 will show up at the top display. Use Up and Down button to change the value on the lower display. Press SET again to set the T2 (only for Delayed Interval or Cycle mode). Press SET button to confirm the setting and exit the timer setting mode.

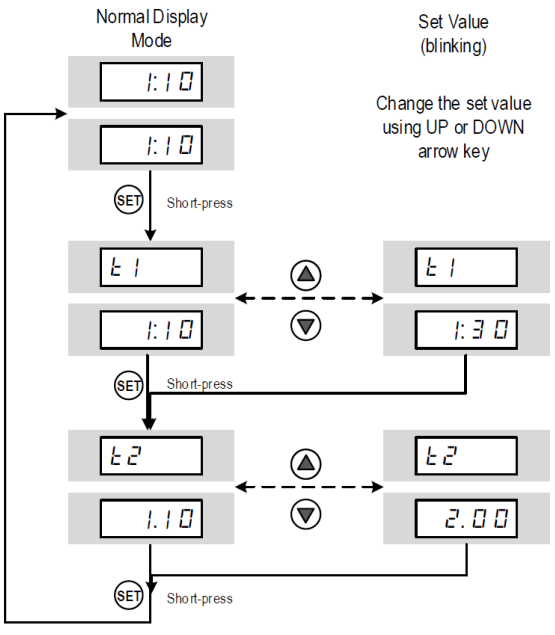

Figure 4. Timer setting mode flow chart

When adjusting the time, each time the Up or Down button is pressed, the value will increase by one unit. But if the button is pressed and held, the value will continuously increase, as the holding time increases, the rate of increase will accelerate. You can use this feature for large value adjustment. When the

number is getting close to desired value, release the button. Press it momentarily for fine setting adjustment.

Note: When the timer is counting, timer setting mode can still be accessed / changed. After you changed the time and exit the menu, the timer will be automatically restarted the counting process. It is recommended to stop the counting at first then edit all the settings & parameters.

6. Operation: How to access parameters

Press and hold the SET button for 3 seconds to bring up the parameter menu. The first parameter "FUNC" will appear on the top display. The lower display will show its current value in flashing. To change the value, use the Up or the Down button to select different parameter values, and then press the SET button to confirm the new value and move on to the next parameter. See Figure 4 for a flow chart on how to access and change parameter values. For the definition of each parameter value, see the following section.

Table 4. List of Parameters.

Code		Description	Range	Initial	Note
Timer setting mode (Press the SET button momentarily)					
T1	t1	Set value for T1		1:10	5
T2	t2	Set value for T2		1.10	
Parameter mode (Hold the SET button for 3 seconds)					
FUNC	FunC	Timer function mode	SDL, DINT, CYCL,	SdL	6.3
T1	t1	Time unit of T1 timer	S, M:S, M, H:M, H, D:H	m:S	6.4
T2	t2	Time unit of T2 timer		S	
TDIR	tdir	Timer direction	UP, DN	dn	6.5
POM *	Pom	Power-on memory	OFF, ON	oFF	6.6 *
OUT	out	Relay output mode	OFDL, ONDL	oFdL	6.7
RUN	run	Timer trigger mode	PU, RS-F, RS-R	rS-r	6.8
STOP*	StoP	Relay status when the timer is stopped. (Conditional parameter)	0, 1	0	6.9
VER	uEr	Firmware version. Display only.	1.5.0	1.5.0	6.10

6.3 FUNC: Timer function mode

Three timer function modes are available in this timer.

- SDL (Single Delay): Only one timer setting, T1, is available. The timer will run for a pre-set time duration and stop.
  In Single Delay and On Delay mode (i.e., FUNC = SDL, OUT = ONDL), a special parameter "STOP" will appear in the parameter menu. Please refer to section 6.9.
- DINT (Delayed Interval): Two timer settings, T1 and T2, are available. The timer will run through the preset durations T1 and T2 sequentially and then stop with no repetition.
- CYCL (Cycle): Two timer settings, T1 and T2, are available. The timer will run through the preset durations T1 and T2 sequentially and repeat the Cycle until the user stops the timer using the STP button or the STP terminal.

Table 5. Timer Function Summary

Function	Description
SDL (Single Delay)	One timer period (T1). The timer runs once and stops.
DINT (Delayed Interval)	Two timer periods (T1 and T2). The timer runs T1, then T2, then stops.
CYCL (Cycle)	Two timer periods (T1 and T2). The timer continuously repeats T1 and T2 until stopped.

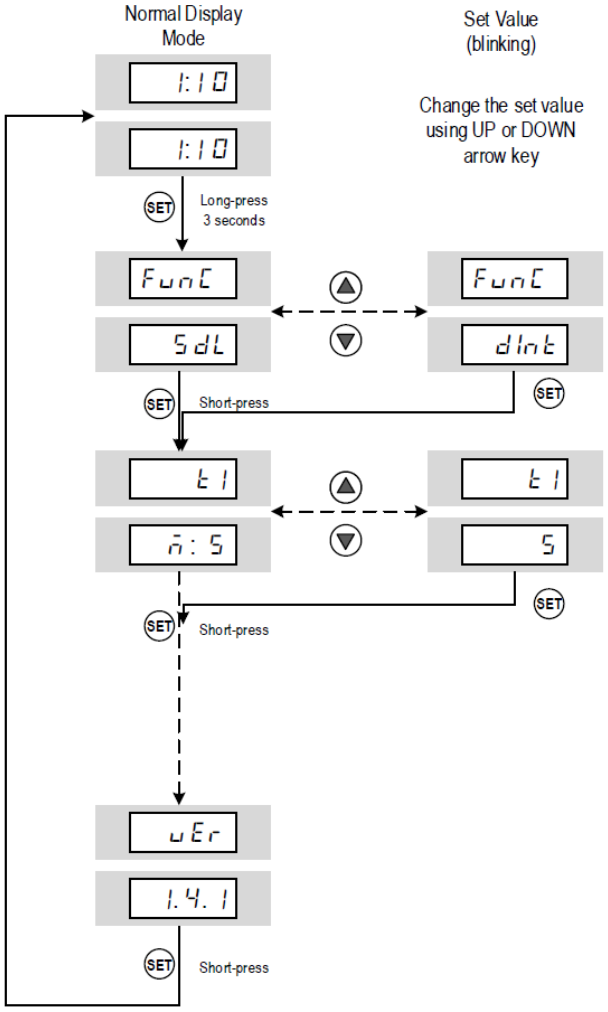

Figure 5. Parameter mode flow chart

6.4 T1/T2: Timer unit

Table 6. Timer Units and Range.

T1 / T2 Settings	Timer Units	Timer Range
S	Seconds	0.01 s ~ 99.99 s
M:S	Minutes and seconds	1 s ~ 99 m 59 s.
M	Minutes	1 m ~ 9999 m
H:M	Hours and minutes	1 m ~ 99 h 59 m
H	Hours	1 h ~ 9999 h
D:H	Days and hours	1 h ~ 99 d 23h

The T1 (and T2 if available) parameter determines the unit and range of the time of the pre-set time T1 (and T2). The available settings and the according timer range are listed in the table below.

6.5 TDIR: Timer direction

This parameter determines the counting direction. The timer can either count up or
count down. This setting applies to both T1 and T2.

- UP: counting up.
- DN: counting down.

6.6 POM: Power-on memory

This parameter determines how the timer behaves after a power interruption.

- OFF: No power-on memory. After a power loss, the unit resets.
- ON: After a power loss, the unit resumes operation from the point at which the outage occurred once power is restored.

6.7 OUT: Relay output mode

This parameter determines the output mode of the relay module. Available options are:

- OFDL (OFF Delay): The relay energizes when timing starts and de-energizes when the timer reaches the setpoint.
- ONDL (ON Delay): The relay de-energizes when the timer starts counting and energizes when the timer reaches the setpoint.

For timer function mode with only one timer setting, i.e., SDL (Single Delay), the OUT setting applies to T1.

For timer function mode with two timer settings, i.e., DINT (Delayed Interval) and CYCL (Cycle), the OUT setting applies to T1. The relay status during T2 will just be the opposite of T1.

6.8 RUN: Timer trigger mode

This parameter determines how the timer should start counting and it controls both RST terminal (T5) and EXT terminal (T2). The RST and EXT terminals each carry a 5 VDC standby signal relative to the COM terminal (Terminal 1). When RST/EXT and COM are connected, the voltage on RST/EXT will be pulled low to 0 V, creating a falling edge of DC voltage; when RST/EXT and COM terminals are disconnected, the voltage on RST/EXT will rise to “high” to 5 V, creating a rising edge of DC voltage.

The available settings of RUN parameter are:

- RS-R (Rising-Edge): When the internal voltage on the RST/EXT terminal rises from low to high, the timer will start counting. A “Rising Edge” can be created by releasing a closed switch that connects RST/EXT and COM terminals.
- RS-F (Falling-Edge): When the internal voltage on the RST/EXT terminal falls from high to low, the timer will start counting. A “Falling Edge” can be created by pressing down a normally open switch, maintained action or momentary action, that connects RST/EXT and COM terminals.
- PU (Power Up): The timer will start counting once the unit is powered up.

The diagram below shows when the timer will start counting when the RUN parameter is configured differently. The second row shows the status of a NO switch that connects COM and RST terminal together. The third low shows the voltage status on the RST terminal. And the last three rows shows when the timer counting is triggered in each configuration.

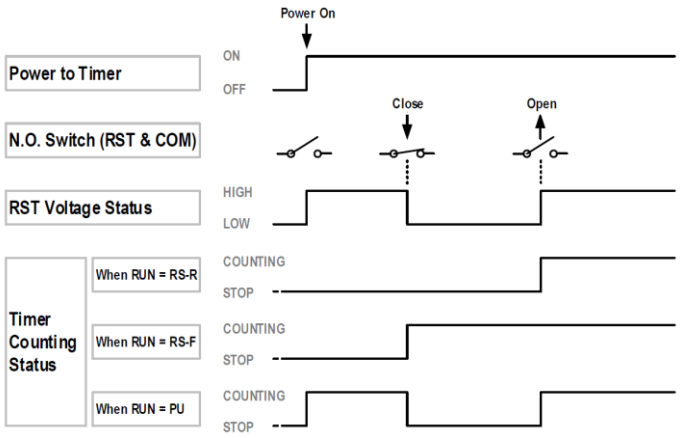

Figure 6. Start the timer with different RUN configuration.

6.9 STOP: Relay status when the timer is stopped.

This parameter is only available in a configuration when the Timer Function is set to Single Delay mode (FUNC = SDL) **AND** when the Relay Output Mode is set to On Delay mode (OUT = ONDL). If these two conditions are not met, the STOP parameter will be hidden in the menu.

When the timer is configured in such way (FUNC = SDL, and OUT = ONDL), the output relay should stay off (de-energized) when the timer is counting, and the relay should energize at the end of the timing period.

Two settings are available:

- STOP = 0: When the counting process is completed, or the timer is stopped during the timing period, the relay output is forced to the final state (energized).
- STOP = 1: When the counting process is completed, or the timer is stopped during the timing period, the relay output is forced to the initial status (de-energized).

STOP parameter works for both the STP terminal and front STP button. **STOP = 1 is useful** when using ONDL mode with the NC relay contacts (Terminals 6 and 7), if you want to stop the timer while keeping these contacts closed.

Table 7. STOP parameter

Operating condition	STOP = 0	STOP = 1
Timer is counting	De-energized	De-energized
Timer completes counting	Energized	Energized
Press STP while timer is counting	Energized	De-energized
Press STP after counting is completed	Energized	De-energized

Example: Assuming you are using FUNC = SDL, and OUT = ONDL and STOP = 1. When timer is powered up but not running, relay is not energized. When the timer is counting, relay is not energized. When the counting process is completed, **relay is energized**. Then press STP front key once or use the STP terminal on the back, relay will be reset to de-energized status again.

Application notes:

A) A user may use the timer to activate a buzzer at the end of a process. After acknowledging the notification, the user may want the Stop function to immediately silence the buzzer by returning the relay to its initial state.

B) A user may use the timer to delay the start of an oven. In some situations, the user may wish to cancel the remaining delay and immediately start the oven. In this case, the Stop function should force the relay to its final state.

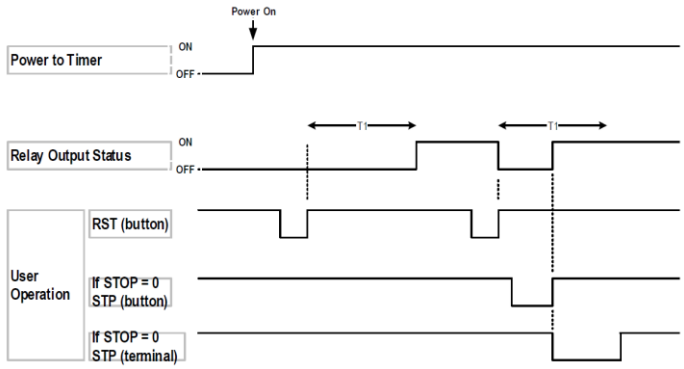

Figure 6.1. Example: FUNC = SDL, OUT = ONDL, RUN=RS-R, STOP = 0.

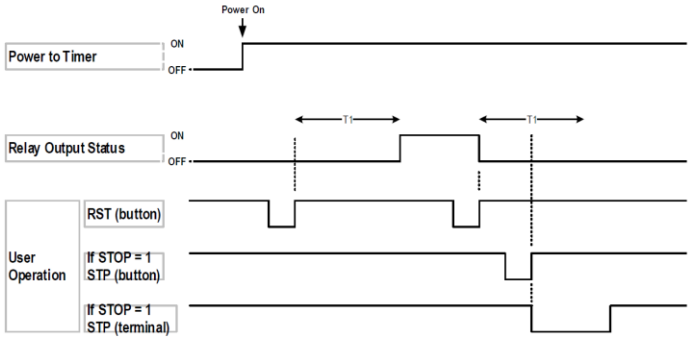

Figure 6.2. Example: FUNC = SDL, OUT = ONDL, RUN=RS-R, STOP = 1.

6.10 VER

This is a display-only parameter, which shows the current firmware version

6.11 Product Limitation

1). **Not a safety device:** The JSL-75 is a process timer and is not a safety-rated temperature limiter or emergency shutdown device. When using the timer to control heating equipment, always provide independent over-temperature protection and ensure that the system enters a safe state in the event of timer power failure or component failure.

2). **EXT input cannot be disabled:** The EXT input is always enabled and cannot be disabled through the timer's programming menu. If you do not intend to use this feature, leave Terminal 2 (EXT) disconnected.

3). **Automatic triggering by EXT:** There is no limit on how many times the EXT input can trigger the timer. Whenever the timer is not running, a qualifying EXT trigger signal will automatically start a new timing cycle. Additional EXT trigger signals received while the timer is already running are ignored.

7. Wiring Examples

WARNING: DO NOT apply external voltages to any of the signal terminals!

7.1 Uses the PID high-temperature alarm directly to trigger the timer (Example: Auber SYL-2352 PID)

In this example, AL2 relay from the SYL-2352 from this PID is not used. AL1 relay (high temperature alarm) from the SYL-2352 is used to start the timer. AL1 relay (T1 and T13) from the SYL-2352 is connected to EXT terminal (T1 and T2) from this timer.

One N.O. momentary switch is also connected to JSL-75 Terminals 1 (COM) and 5 (RST). So this timer can be started by either PID, or the external switch.

N.C. output from JSL-75 (T6 and T7) has been wired in the same loop from 2352's SSR to the SSR input module. So when the timer is not running, the SSR will still receive the control signals from the PID.

Once temp reaches 400F, AL1 relay in 2352 will be enabled and it will trigger the counting process from the JSL-75. Once time is up, the timer will shut off the heater control signals to the SSR. To restart the heating process, press STP front button once. The temp control will be resumed and the timer will be restarted again when high alarm AL1 is triggered again. Or you can press RST button once so the timer will be restarted immediately and the temp control will be resumed.

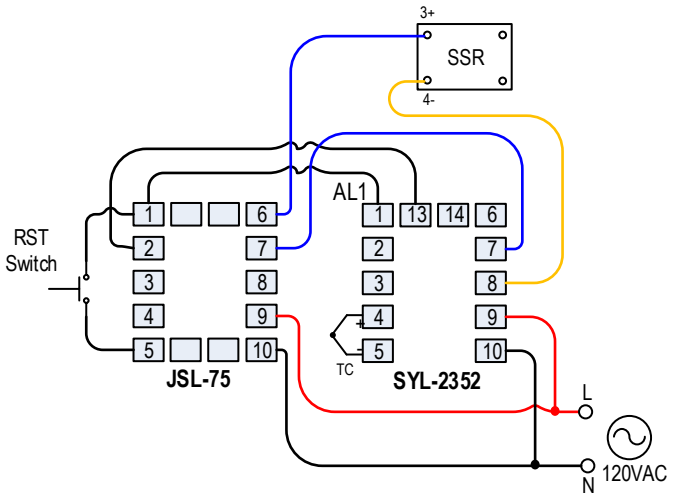

Figure 7.1 Wiring example 1.
SYL-2352 and SSR need to be ordered separately.

System limitation: In this example, JSL-75 relay is switching the SSR's control circuit, not the heater's main power circuit.

Recommended settings for JSL-75:
FUNC = SDL(single delay)
T1 = M:S (minutes: seconds)

TDIR = DN (for counting down)
POM = ON (enabled power-on memory)
OUT = ONDL (On Delay)
STOP = 1 (reset the relay status)
RUN = RS-R (rising-edge triggered)

Recommended settings for SYL-2352:
ALM1 = 400F

7.2 Uses the PID low-temperature alarm with an external relay to reverse the signal to trigger the timer (Example: Auber SYL-2352 PID)
In this example, AL1 relay (high temperature alarm) from SYL-2352 is used for an external 120V buzzer already, but we can still use AL2 relay (low temperature alarm) to start the timer. In SYL-2352, AL1 and AL2 shared the same COM terminal. An external relay is required, which will not only convert the live signal into the dry signal for the timer input, but also reverse the alarm action from low temperature alarm to high temperature alarm.

In this example, AL2 relay (T14) from 2352 and a separate neutral wire are connected to the coil of an external relay, then connect COM and NC from this relay to the EXT terminal (T1 and T2) from this timer.
One N.O. momentary switch is also connected to RST terminal (T1 and T5) from the timer. So this timer can be started by either PID, or the external switch.

N.C. output from JSL-75 (T6 and T7) has been wired in the same loop from 2352's SSR to the SSR input module. So when the timer is not running, the SSR will still receive the control signals from the PID.

Once temp reaches 400F, AL2 relay in 2352 will be triggered and it will trigger the counting process from the JSL-75. Once time is up, the timer will shut off the heater control signals to the SSR. To restart the heating process, press STP front button once. The temp control will be resumed and the timer will be restarted again when alarm AL2 is triggered again. Or you can press RST button once so the timer will be restarted immediately and the temp control will be resumed.

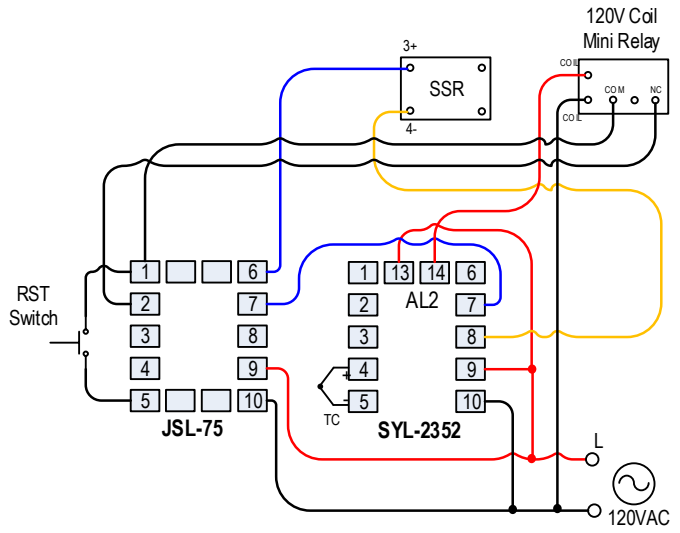

Figure 7.2 wiring example 2.
SYL-2352, SSR and miniature relay need to be ordered separately.
120V buzzer for AL1 is not displayed in this figure.

System limitation: In this example, JSL-75 relay is switching the SSR's control circuit, not the heater's main power circuit.

Recommended settings for JSL-75:
FUNC = SDL(single delay)
T1 = M:S (minutes: seconds)
TDIR = DN (for counting down)
POM = ON (enabled power-on memory)
OUT = ONDL (On Delay)
STOP = 1 (reset the relay status)
RUN = RS-F (falling-edge triggered)

Recommended settings for SYL-2352:
ALM2 = 400F
Note: Alarm suppression needs to be disabled by changing COOL parameter.

7.3 Using a Normally Open Momentary Switch to Start the Timer.
In this example, we will use a momentary action normally open switch to start the timer. At the moment the switch is released, the timer will start counting. We will set the timer for 2 seconds, and use the timer's N.O. output contacts to energize an external mechanical relay during these 2 seconds.

Connect 120VAC power supply to this timer. In this example, we will connect the live line to terminal 9, and connect the neutral line to terminal 10. Install a jumper between terminal 8 and 9.

For the external relay wiring, connect terminal 7 from the timer to the top side of the relay coil, connect neutral to the bottom side of the relay coil. So the timer's dry output (terminal 7 & 8) will control the hot wire to the relay coil.

On the Signal Terminals side (1 ~ 5), connect COM (terminal 1) with RST (terminal 5) using a momentary action switch with normally open contacts. If you want to add a switch to pause the timer, connect COM with PAU (terminal 4) using a maintained action normally open switch.

Now, you can power on the timer and adjust the settings. Please enter the menu by long-press the SET button for 3 seconds and confirm the parameters are set as below.

FUNC = SDL(Single Delay)
T1 = S(seconds)
TDIR = DN (for counting down)
POM = OFF (no power-on memory)
OUT = OFDL (Off Delay)
RUN = RS-R (rising-edge triggered)

Then, after the timer is at the normal operation mode, short-press the SET button to bring up the set value for T1, and edit the timer to "2.00" using the arrow buttons.

Now, you can press and release the momentary switch that connects 1 and 5, the upper display should begin counting down, the RUN indicator should light up, and the NO contacts of the output relay (terminals 8 and 7) should close (pull in). You can test the resistance between terminals 8 and 7.

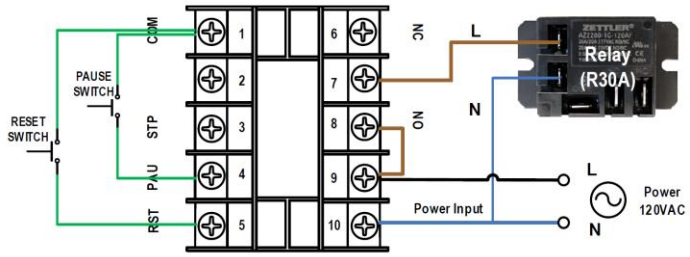

RESET SWITCH: normally open momentary switch.
PAUSE SWITCH: normally open maintained switch.

Figure 7.3. Using a normally open momentary switch to start the timer.

To connect the output to an external mechanical relay, disconnect the timer from AC power source, jump the terminal 9 (live line) to the NO contact terminal 8. Connect terminal 7 (hot line) to one of the 120 VAC relay coil tabs. Connect the other coil tab to the neutral line. We use Auber's R30A relay as an example. Wiring to the load is now shown in the diagram.

7.4 Using a Normally Open Maintained Switch to Start the Timer.

In some applications, a user may want to use a maintained-action normally open switch to start the timer at the moment that the switch is pressed down (contacts closed). Or, a user may want to use a normally open alarm relay from another control unit to start the timer, and the counting should start when the alarm relay closes.

In such cases, a user should change the parameter value for "RUN" in the menu, set RUN = RS-F (falling-edge triggered).

The wiring of the switch is the same as in the previous wiring example. A simplified wiring diagram is shown below.

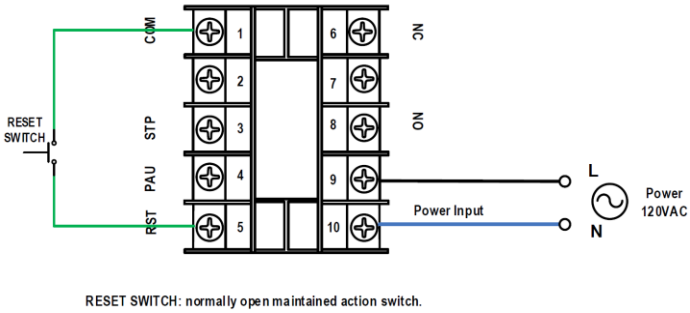

RESET SWITCH: normally open maintained action switch.

Figure 7.4. Using a normally open maintained switch to start the timer.

7.5 Using External Logic Signal to Start the Timer.

In some applications, a user may want to use an external logic signal to start the timer. A simple wiring example is shown below.

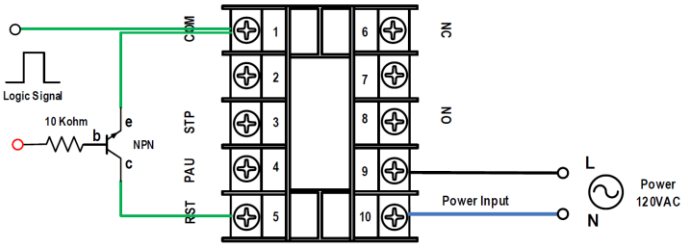

Figure 7.5. Using logic signal to start the timer.

8. Timing Diagrams

The diagrams in this section show the relay output status when a user operates RST, PAU, and STP buttons or terminals when the Timer Function (FUNC) and the Output Mode (OUT) are configured differently.

In all these cases, the RUN parameter is set to "RS-R", meaning the timer starts when the RST button (on the front panel) or an external momentary normally open (N.O.) switch connected to terminals #1 and #5 is released.

Table 8. The Timing Diagram and the Corresponding FUNC and OUT settings.

Figure #	FUNC	OUT	RUN
8.1	SDL (Single Delay)	OFDL (Off Delay)	RS-R
8.2	SDL (Single Delay)	ONDL (On Delay)	RS-R
8.3	DINT (Delayed Interval)	OFDL (Off Delay)	RS-R
8.4	DINT (Delayed Interval)	ONDL (On Delay)	RS-R
8.5	CYCL (Cycle)	OFDL (Off Delay)	RS-R
8.6	CYCL (Cycle)	ONDL (On Delay)	RS-R

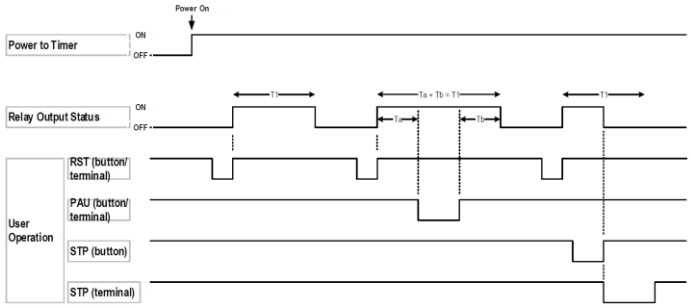

Figure 8.1. FUNC = SDL (Single Delay), OUT = OFDL (Off Delay).

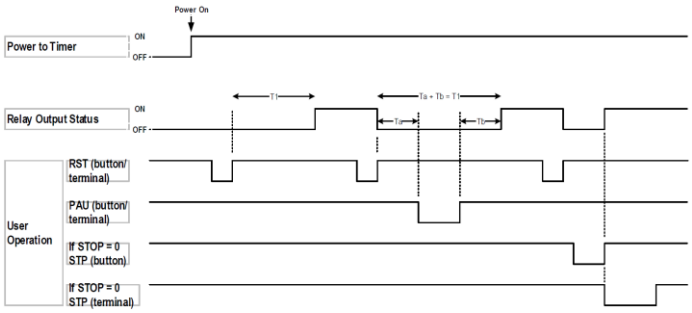

Figure 8.2(a). FUNC = SDL (Single Delay), OUT = ONDL (On Delay), STOP =0.

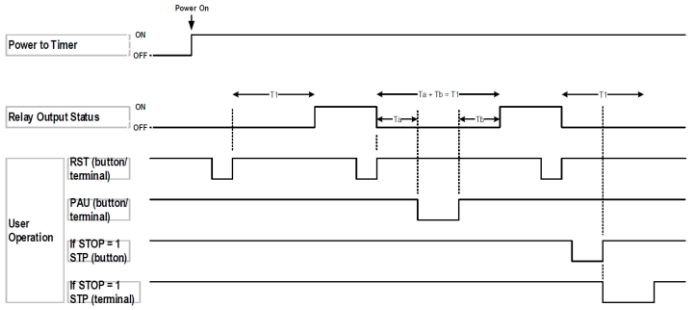

Figure 8.2(b). FUNC = SDL (Single Delay), OUT = ONDL (On Delay), STOP =1.

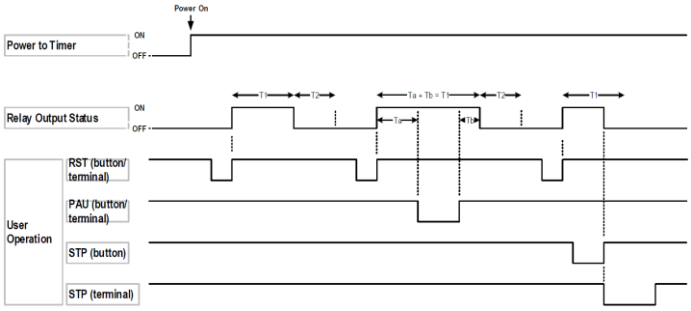

Figure 8.3. FUNC = DINT (Delayed Interval), OUT = OFDL (Off Delay).

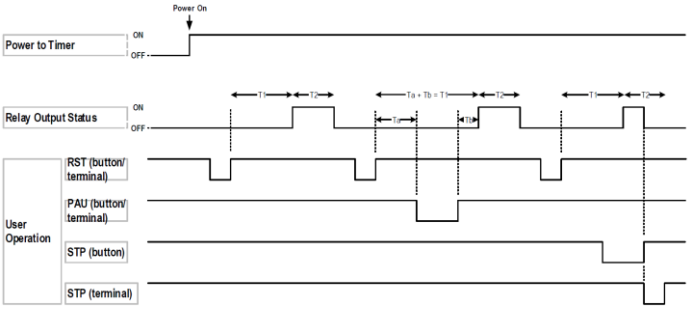

Figure 8.4. FUNC = DINT (Delayed Interval), OUT = ONDL (On Delay).

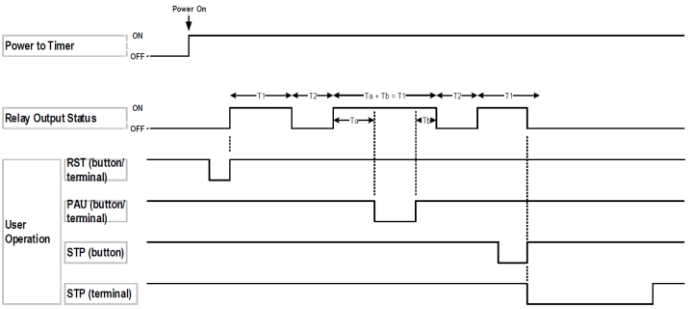

Figure 8.5. FUNC = CYCL (Cycle), OUT = OFDL (Off Delay).

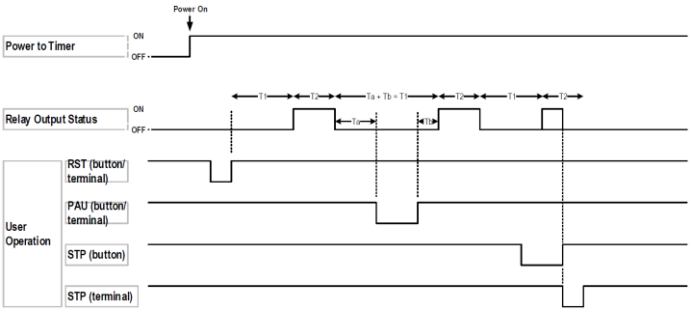

Figure 8.6. FUNC = CYCL (Cycle), OUT = ONDL (On Delay).

(END)

Auber Instruments Inc.
5755 North Point Parkway, Suite 99,
Alpharetta, GA 30022
www.auberins.com
Email: info@auberins.com

Copyright © 2026 Auber Instruments Inc. All rights reserved.
No part of this datasheet shall be copied, reproduced, or transmitted in any way without the prior, written consent of Auber Instruments. Auber Instruments retains the exclusive rights to all information included in this document.