Operation Instruction Manual

WSD-1201H

Programmable PID Temperature Controller with Dual Probe*

Version 1.0 (Apr, 202)

Auber Instruments
5755 North Point Parkway, Suite 99
Alpharetta, GA 30022
www.auberins.com

Introduction

Thank you for purchasing the Auber WS series temperature controller. We sincerely appreciate your decision and trust that our machine will meet your expectations in both the quality of the result and the value of our product. While we are delighted that you may be anxious to operate the controller for your project, a few minutes of your time reading through this manual will only serve to enhance your experience in the months and years ahead. In particular, we urge you to read through the safety warnings below. Although this plug-and-play controller is very easy to operate, the process involves high temperature and high wattage appliances and your safety is paramount.

SAFETY WARNINGS

- This controller is designed only to be used with devices that have limited power and their own thermal cut off protection, such as a thermostat or thermal fuse in case of controller failure.
- Do not place any objects on the top of the controller surface as it is used to vent excess heat during its operation.
- The maximum electric current this controller can handle is 13 Ampere. For 120 Volt AC in US and Canada, this limits the heater power to 1450 watts.
- Always place the sensor in the controlled subject when the controller is on. Before turning on the controller, please make sure the sensor is placed inside the container to be controlled. Leaving the sensor outside of the solution will form an open loop operation, and the controller will assume the temperature is low even if the controlled subject is already very hot. The controller will provide full power to the heater which will not only overheat the controller, but also damage your

* Patent pending

appliance possibly causing a fire.

- This controller is designed to control the devices recommended by Auber Instruments only. Using it to control a non-recommended device can be dangerous and cause fire. Auber Instruments is not liable for damages caused by misuse of the controller. If you are not sure the controller can be used, please contact Auber Instruments before use.
- If an abnormal display or noise is observed, turn the controller off, unplug the power cord and contact the manufacturer before using it again.
- Clean the controller only when it is cool and unplugged.
- Do not allow children to operate the controller.

Specifications

Number of storable recipes	8
Number of steps in each recipe	6
Input voltage	100 to 240 VAC 50 /60 Hz
Output voltage	The same as the input.
Maximum Current	12A for 120V AC (1440W), 8A for 240V AC (2000 W)
Controller Mode	PID, PI, PD or P.
Output switching device	Built-in optically isolated solid state relay with zero voltage crossing switching.
Sensor type	PT1000 RTD sensor
Control probe dimension	4 mm diameter x 40 mm long.
Food internal temperature probe dimension	4 mm diameter x 150 mm.
Probe cable length	5 ft (1.5 meter) (both of them)
Timer range	6 steps with 0.1 to 99.9 hours for each step.
Temperature resolution	1°C or 1°F.
Temperature display unit	Celsius or Fahrenheit.
Temperature display range	-40 - 400°C, or -40 - 750°F.
Mini. Control Temperature	5°C (9°F) above ambient with smoker generator off, 22 °C (40 °F) above ambient with smoker generator on.
Max. Control Temperature	350°C (660°F).
Temperature accuracy	+/-1°C
Smoker generator control output maximum current	3A at 120V
Dimension	6 x 3 x 7.5 inch (155 x 80 x 190 mm) W x H x D.
Weight	3.0 lb (1.5 kg).
Warranty	one (1) year for controller. 90 days for sensor

***Note**: For international orders, a US power cord is included. Users can splice the*

connector off the cord to a power strip outlet that meets the local standards for the output. For the input, the controller has standard IEC 320 C13/14 socket. Users can use a computer power cord that meets the local standard to power it.

Operating Instructions

1. Description of the controller

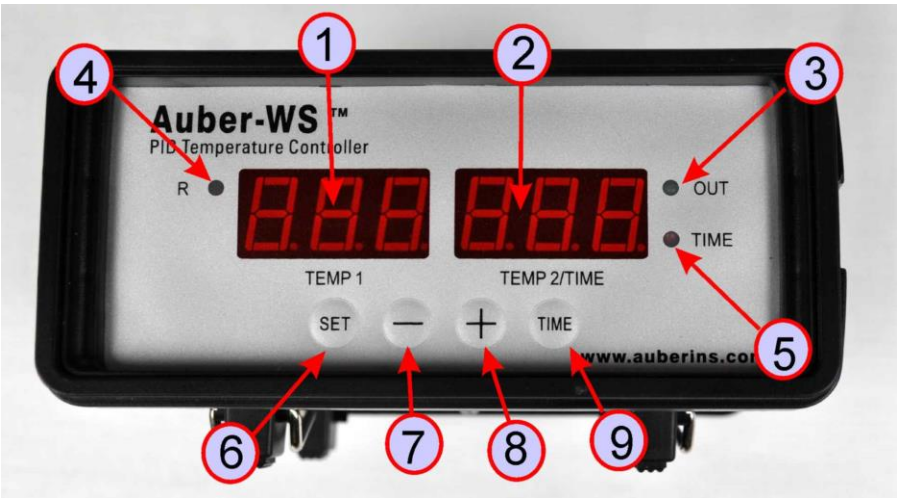

Figure 1. Front Panel

1) **TEMP1, Left window** - During normal operation, it displays the temperature values of probe 1. When the high or low limit alarm of probe 1 is on, this window will flash between the alarm type (AH1or AL1) and the temperature. In the parameter setting mode, it displays the controller's system parameters.
2) **TEMP2/TIME, Right window** - During normal operation, it displays the temperature value of probe 2 (food internal temperature probe) or the time passed since the controller was powered up. When the high limit alarm of probe 2 is on, this window will flash between AH2 and the temperature. In the parameter setting mode, it displays the value of the parameter.
3) **Output status indicator** - This LED indicates the output status that should be synchronized with the heater. When it is on (lit), the heater is powered. When it is off, the heater power is off. When it is flashing, it means the heater is on and off intermittently to reduce the power output. It should be synchronized with the power light on the cooking device.
4) **Smoker generator control output status indicator**. When lit, the smoker generator control output is on. When off, the output is off.

5) **Timer status indicator** - When lit, right window shows the time passed since power up. When it is off, right window shows the current temperature detected by the probe 2.
6) **SET Key** - For showing current temperature settings, entering parameters setting mode and confirming various actions taken.
7) **"-" Key** - To decrement displayed values when controller is in the parameter setting mode. During normal operation, press it to cancel the alarm.
8) **"+" Key** - To increment displayed values when controller is in the parameter setting mode. During normal operation, press it will change the left window from temperature to display which step the program is at.
9) **Time Key** - Changes the display in the right window between current timer and temperature values.

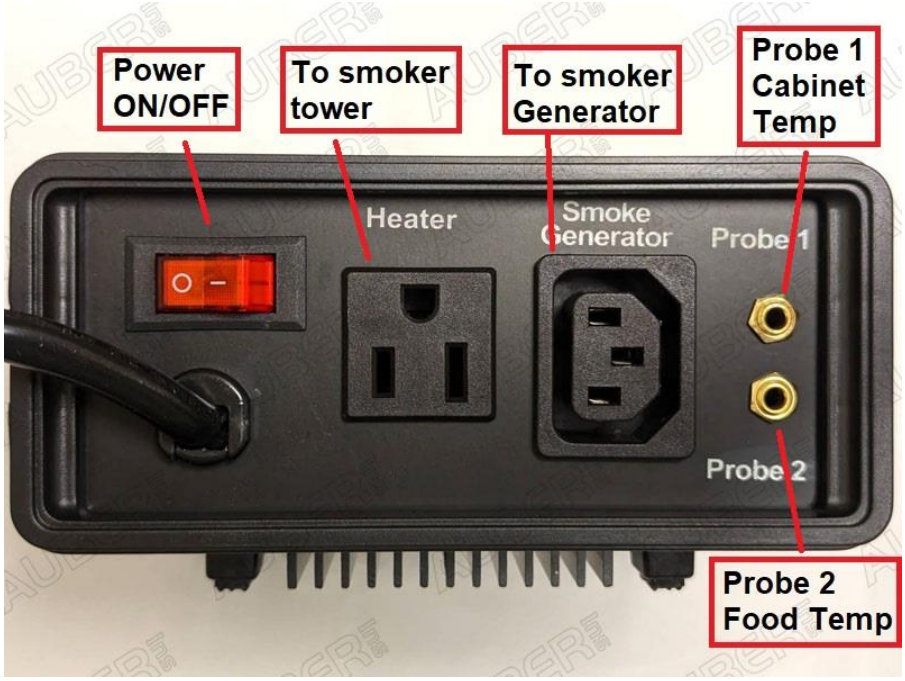

Figure 2. Back Panel

2. **Connecting and operating the controller**

Install the sensor.
(Note: If you ordered wall mount sensor instead of free hanging sensor, please see the separate instruction in the CD for its installation)
The controller is supplied with two probes. The one with the short tip is for measuring the cabinet temperature. We name it probe 1. It needs to be plugged to the top sensor jack at the back of the controller. The long probe with a bend at the end is for the meat internal temperature measurement. It needs to be plugged to the bottom sensor jack at the back of the controller. The tips of the probes are dropped into the damper hole. Place a piece of tape on the top of the smoker tower to hold them in place. The tip of probe 1 should be placed close to the food but high enough so that it does not touch the food. (See **Error! Reference source not found.**). The tip of probe 2 is to be inserted into the m eat.

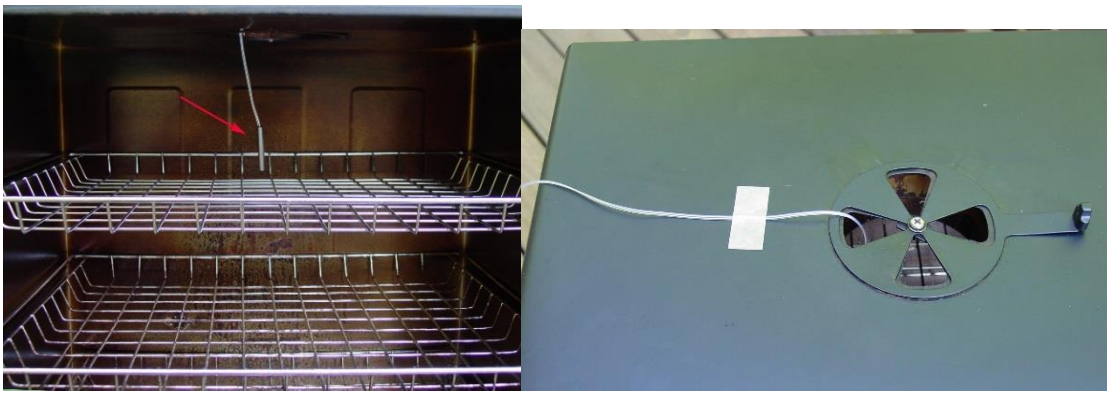

Figure 3. Sensor position. Left, the sensor should be placed close to the food but high enough so that it does not touch the food. Right, hold the sensor in place by a piece of tape.

For the “Original” and Stainless Steel Bradley smoker, the Temperature Heat Control Switch on the smoker tower should be slid to the Hi position (Most right).

There are several ways to power up the controller and Bradley Smoker.

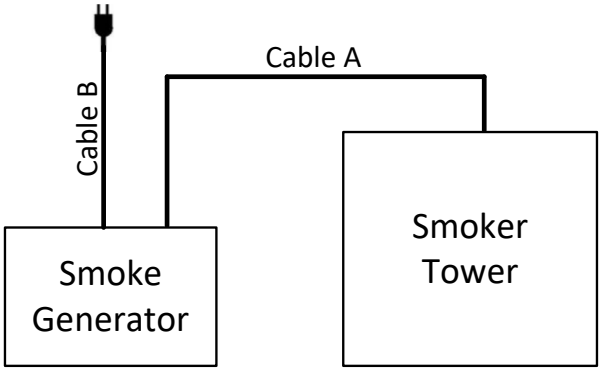

Figure 3.1 Power Cable wiring for Original Bradley Smoker

Cable A: Power cable for Smoker Tower, C14 plug

Cable B: Power cable for smoke generator, NEMA5-15P plug

1) Connection for Bradley Original Smoker, with control of the smoker generator.

a) Connecting the controller to the power outlet, you should use the power cord that came with the Bradley Smoker for connecting the smoker generator to the power outlet.

b) Connecting the controller to the smoker generator. You should use the power cord that originally was used for connection between the smoker generator and smoker tower.

Figure 4. Connection between the controller and Bradley Original Smoke generator.

c) Connecting the controller output to the Bradley Smoker Tower with the power cord that came with the Auber Controller

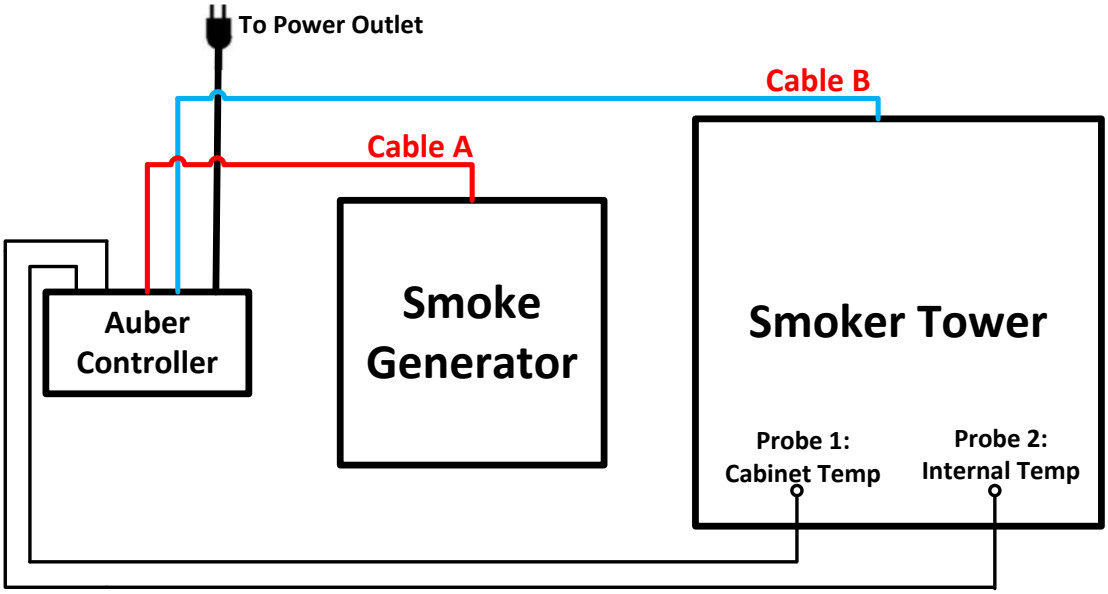

Figure 5. Diagram

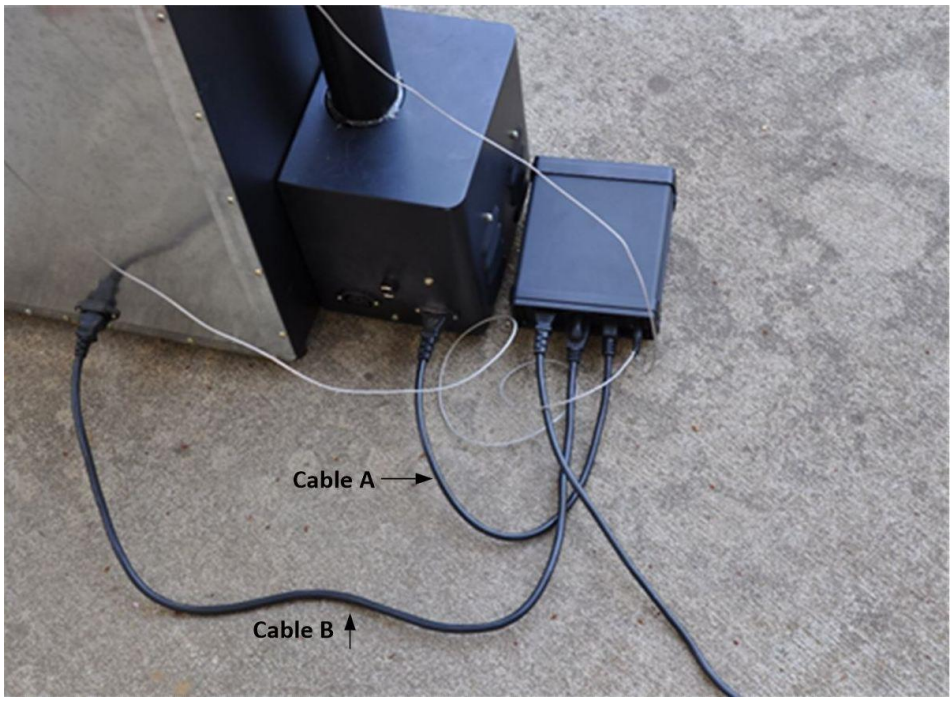

Figure 6. Back view

Figure 7. Connection between the controller and smoker

2) Connection for Bradley Digital/Smart Smoker.

For the Bradley Digital Smoker, both controller and smoker generator should be connected directly to the wall outlet. Connect the controller output with the smoker tower.

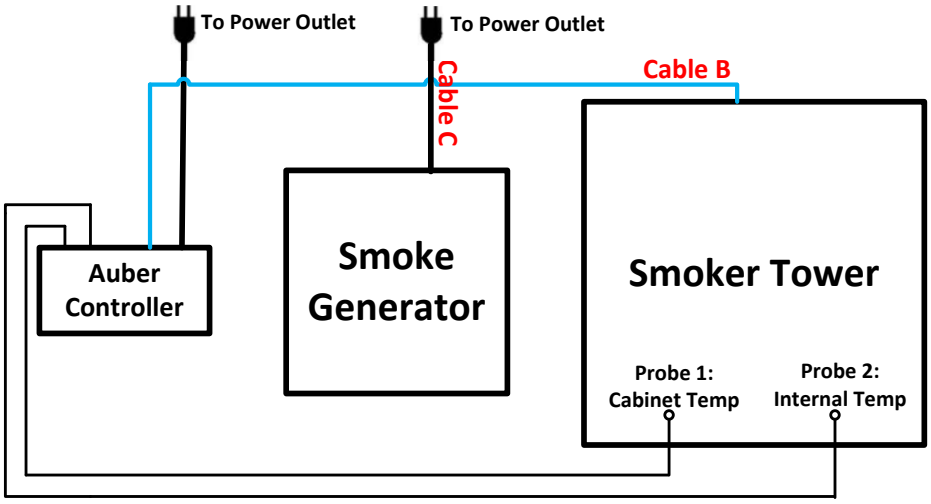

Figure 8. Connection for Bradley Digital Smoker
Cable C is extra 18 AWG power cord, same as Cable B

3. Programming the smoking temperature profile

A total of 6 steps can be programmed with this controller. Each step contains the set temperature (C-X) and an ending criteria setting (E-X), where “X” is the step number (e.g. Step 4 temperature is represented by C-4 and step 4 ending criterion is represented by E-4). The ending criterion determines how the controller finishes the current step and starts the next step. There are two options for the user, t and F. Set E-X to t if you want step X to be end by a preset time. Set E-X to “F” if you want step X to end by a preset temperature of the internal probe.

If you set E-X to “t”, you will be asked to set t-X for the time. Time is defined as the duration between the last step and the next step. Please make sure the time is long enough for the heater to heat up the smoker. If the time is set too short, the temperature may not be able to reach the current step temperature setting, before it jumps to the next step. The time unit is in hours with 0.1 hour (6 minutes) resolution.
If you set E-X to F, you will be asked to set F-X for the temperature of the internal probe. If all of the E-X are set to t, the controller can operate with only the probe 1 plugged in.

To program the temperature profile, press SET key once. The display will show C01 at the left window and the temperature setting on the right window for step 1. Use “+” and “-” keys to change the setting. When finished, press the SET again to confirm the change. The display will show E-1 on the left window and the ending criterion setting on the right window. Use “+” and “-” keys to change the settings. When finished, press the SET again to confirm the change. The left window will display t-1 or F-1 depending whether t or F is selected for the E-1. The right window will display the setting for t-1 or F-1. Use “+” and “-” keys to change the setting. When finished, press the SET again to confirm the change. The display will go the step 2 setting. It will repeat in the same way as the step 1. After you program enough steps for your recipe, you can program the rest of the steps of E-X to t and set t-X to zero.

The temperature setting will not be changed if SET is not pressed (confirmed). After programming the necessary steps for cooking, you can finish programming by pressing the SET continuously until it passed t-6 and display the current temperature. You can also leave the controller alone. The display will return to the normal display mode if no key is pressed within 15 seconds.

The initial program setting for the controller is listed in

Table 1. This program will control the temperature of the cabinet at 120 °F for 2 hours. Then, change the temperature to 190 °F. It will stay at 190 °F until internal temperature of the meat reaches 160 °F. Then, the controller will drop the temperature to 130 °F for 30

hours, waiting for you to pick up the food. If you set C-3=0 and t-3=0, when meat internal temperature reaches 160 °F, the controller will shut off the heater, flashing END on both windows, and turn on the beeping alarm to notify you that cooking is finished.

Table 1. Initial program setting

Step #	Temp (F)	Step #	F or T	Step #	value
C-1	120	E-1	t	t-1	2.0
C-2	190	E-2	F	F-2	160
C-3	130	E-3	t	t-3	30.0
C-4	0	E-4	t	t-4	0.0
C-5	0	E-5	t	t-5	0.0
C-6	0	E-6	t	t-6	0.0

The smoker generator power is controlled by parameters R1 and R2 which can be accessed by code 166 (see section 7-1). The generator can be turned on for two steps. R1 is for the first step. R2 is for the second step. e.g. To turn on the smoker generator at step 1 and 3, set R1=1 and R2=3. If you only want to use one step, set either R1 or R2 to 0, and set the other one to the step you want to turn on the smoker generator. The initial setting for the controller is to turn on the generator at step 1 only.

4. Check the current step and display the time

To check which step the program is at during cooking, press the **"+"** Key (8) once. The left window will show the current step in the form of P0X on. e.g. It will display P03 if the controller is at step 3. The display will return to the temperature display automatically after 8 seconds. To check how long the controller has been running since powered up, press the **Time** key (9) once. The **Timer status indicator** will light. The right window will show the actual time passed since the controller was last powered up. Please note that this is the total time, not the time that has passed in the current step. Pressing the Time key again will switch the display to the internal temperature.

5. Tuning the controller

This controller contains two sets of system parameters that can be changed for different applications. This controller is shipped with the system parameters set for the Bradley Smoker. The user should not change these parameters. However, if you feel that performance is not ideal, you can try to manually tune the system or run the auto-tune again. For detailed information on how to tune the controller, please read the section 7 and 8 for tuning the controller.

6. Important considerations for better control results

The following is a list of things that could affect the results of temperature control.

a) The smoker and controller location. The smoker should not be placed directly in the sun. Direct sun light can heat the smoker to above 140 °F in the summer time, making controlling the temperature at 140 °F impossible. This is especially the problem for the Bradley Original Smoker because of its black color. The controller should be placed away from direct sun light also. Although the controller uses a high intensity LED display, it will still be difficult to read when sun light is directly shined to its surface. Users should also avoid exposing the controller to water and rain, which could damage the controller.

b) Low temperature control. The control result for temperatures below 125 °F will not be as accurate as for higher temperatures when the smoker generator is on. This is because there are two heaters in the smoker tower. One is the smoker heater controlled by the PID controller. The other is the heater from the generator that is not controlled. Our test shows that the heater in the generator itself can raise the temperature of the smoker tower by 60 °F (2 hours, in the shade with damper open). That means when the ambient temperature is at 70 °F, the smoker can be heat up to 130 °F in 2 hours by the heater of the generator (without using the heater in the smoker).

c) Damper position. Keeping the damper open will result in better temperature stability because more heat loss is created. This is important when the temperature is set below 140 °F. When the damper is closed, the temperature will take longer time to drop if it is overshot during initial heat up. At higher temperatures, closing the damper will not affect the performance much because the heat loss from the walls of the tower is increased. Closing the damper at high temperature will keep the moisture of the food.

d) Temperature uniformity of the smoker tower. Our test shows that when all the shelves were empty, the temperature inside the smoker tower as fairly uniform except the back half of the lowest shelf that is close to the heater. Users should avoid placing the sensor too close to the heater because it does not represent the temperature of the rest area. When the shelves are filled, temperature variation might depend on how the foods were placed. The bottom shelf can become hotter if more food is placed in it to block the hot air from going up.

7. Controller parameter set up

The controller parameters are divided into three groups.

1) The first group of parameters is related to the control performance. They need to be adjusted based on the system to be controlled. Table 2 shows the list of these parameters, their range and initial set value.

Table 2 List of control parameters and its initial settings under code 166

Symbol	Display	Description	Range	Initial
P	P	Proportional band	0-600	7
I	I	Integral constant (second)	0-900	600
d	d	Derivative constant (second)	0-300	150
AT	At	Auto-tune	0=off 1=on	0
T	t	Cycle rate (second)	1-100	2
R1	r1	Smoker generator on step 1	0-6	1
R2	r2	Smoker generator on step 2	0-6	0

Details about each parameter

- P. Proportional band. It is in 1 degree units. This parameter controls the output of the controller based on the difference between the measured and set temperatures. The larger the P number means the weaker the action (lower gain). e. g. If P=7, the proportional band is 7 degrees. When the sensor temperature is 7 degrees below the proportional band (7 degrees below the setting), the controller will have 100% output. When the temperature is 5 degrees below the set point, the output is 71%. When the temperature is equal to the setting, the controller will have 0% output (assuming integral and derivative functions are turned off). This constant also affects both integral and derivative action. Smaller P values will make both integral and derivative action stronger. Please note the value of the P is temperature unit sensitive. If you found an optimized P value when operating the controller in Fahrenheit, you need to divide the P by 1.8 when changing the temperature unit to Celsius.
- I. Integral time. The unit is in seconds. This parameter controls the output of the controller based on the difference between the measured and set temperature integrated with time. Integral action is used to eliminate temperature offset. Larger number means slower action. e. g. assuming the difference between the measured and set temperature is 2 degrees and remains unchanged, the output will increase continuously with time until it reaches 100%. When temperature fluctuate regularly (system oscillating), increase the integral time. Decrease it if the controller is taking too long to eliminate the temperature offset. When I=0, the system becomes a PD controller. For very slow response systems such as slow cookers and large commercial rice cookers, setting I = 0 will significantly reduce the temperature overshoot.
- d. Derivative time. The unit is in seconds. Derivative action contributes the output power based on the rate of temperature change. Derivative action can be used to minimize the temperature overshoot by responding to its rate of change. The larger the number is, the faster the action will be. e.g. when the door of an oven is opened, the temperature will drop at a very high rate. The derivative action changes the controller output based on the rate of change rather than the net

amount of change. This will allow the controller to act sooner. It will turn the heater to full power before the temperature drops too much

- AT. Auto-tune function. Set AT to 1 then exit the menu. The display will start to flash alternately between AT and the current water bath temperature, which indicates auto-tuning is in progress. When the display stops flashing, the auto-tuning is finished. Now, the newly calculated PID parameters are set and are used for the system. The new parameters will store in the memory even when the controller is restarted. For more information about auto-tune, please see section 8
- T, cycle rate. The unit is in seconds. This unit determines how long for the controller to calculate each action. e.g. If T is set to 10 seconds, when the controller decides the output should be 10%, it will turn on the heater 1 second for every 10 seconds. This parameter should set at 2 seconds for heating with an electric heater.
- R1 and R2. Smoker generator setting. These two parameters determine which steps to turn on the smoker generator. The smoker generator will stay on only for the step it is programmed. It will turns off when program goes to the next step. e.g. When R1=2, and R2=4, the smoker generator will be on during step 2 and 4. R1=0 or R2=0 means that R1 or R2 will not do anything to the smoker, and the smoker will not be turned on. Note: R1 and R2 are enabled when the controller is under multi-step mode (default), and they are disabled under single-step mode. For details, please check section 10.

To prevent changing critical parameters on accident, an access lock, LCK is used. A special code is needed to open the lock for these parameters.

This group of parameters is accessed by input code 166. Figure 9 is the flow chart that shows how they can be changed.

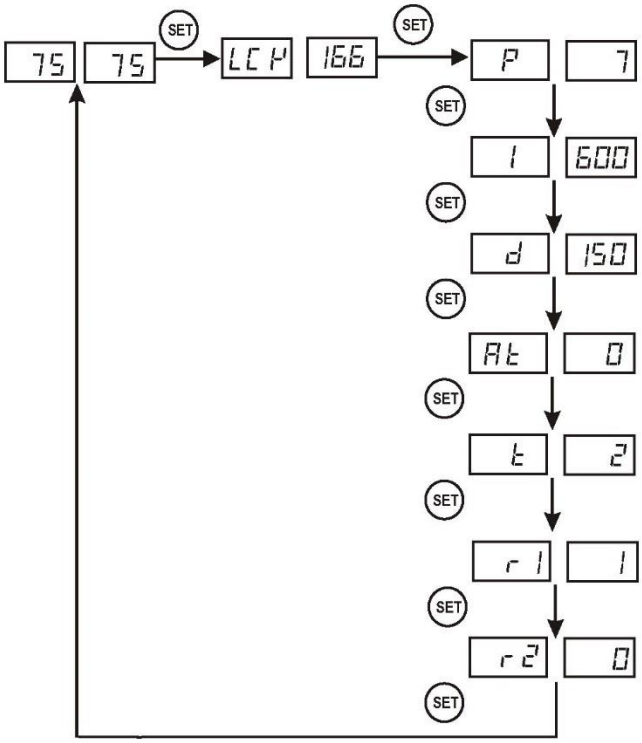

Figure 9. Code 166 Parameter setup flow chart

Press and hold SET key for 4 seconds until LED displays “LCK” on the left window. Then release the SET key. The display on the right window will show “0”. To get into parameters setting mode, you need to key in the pass code. Use “+” and “-” keys to adjust the display to 166 (which is the pass code) and press SET. The left window will display “P” and right window is P setting value, Use “+” and “-” keys to change the setting. When finished, press the SET again to confirm the change. The left display will show the “I” right window has its setting value, use the same “P” setting procedure to set the I value. The rest of parameters are set in the same way.

2) The second group is about the system configuration and set up. Once they are set, they normally do not need to be changed. This group of parameters can be accessed by input code 155. If you don’t want your system to be altered by others, do not let other people know this code. Table 1 show the list of the parameters, their range and initial set value.

Table 3. List of control parameters and its initial settings under code 155

Symbol	Display	Description	Range	Initial
SC1	SC1	Sensor 1 offset (in degree)	-20~+20	0
SC2	SC2	Sensor 2 offset (in degree)	-20~+20	0
Out	OUt	Output power reduction (%)	1-100	100
C-F	C-F	Temperature unit	°C or °F	°F

Details about each parameter.

- SC, calibration offset. The parameter is used to make the input offset to compensate for the error produced by sensor. e.g. if the temperature displays of left window is 2.0 °C in ice water mixture, set SC1= - 2.0 will make the display to shown 0.0 degree. SC1 is for the control temperature probe. SC2 is for the internal temperature probe.
- Out, Output power reduction. It is expressed as a percentage value. This function will allow you to control the maximum output power delivered by the heater. For example, if you set Out=50 and your heater is 1000 watts, the output will use 50% of the 1000 watts as the full output. It treats the 1000W heater as a 500W heater. When the PID algorithm determines 50% output value, the actual power output will be 250 watts. This function can be used in two situations.
  1) When you have a very powerful heater and are using a very small pot of water to cook at very low temperature, for example, a 1400 watts heater with a one litter (1 qt) pot of water at 130 °F. The heater is too powerful for the small water volume. The moment it is on, it releases too much energy and overshoots the temperature. Although it is still possible to stabilize the temperature with proper PID parameters, it is much easier to control if you limit the maximum output to 25%. Ideally, an optimized temperature control system should consume about 25 % of the heater power at set temperature (steady state), for example, if you found out that only 50 watts of energy is needed to maintain the temperature at 60 °C (141 °F), ideally you should use only a 200 watts heater for the job. Too much power will make the system over react too quickly. Too little power will make the system too slow in response. By using the Out function, you can make the 1400 watts heater to act as a 200 watt heater for stable temperature control.
  2) When the cooker consumes more power than controller can handle, for example, if you have a 12A, 120V AC heater and your cooker contains more than 38 liter (10 gallon) of water. It might take more than 90 minutes of full power heating for controller to heat up the pot. Long time of full power operation might cause the controller to over heat. You can set the output to 80%. It will prevent the controller from overheating from staying at full power too long. For details, please see Appendix 1.
- C-F, Display unit setting. You can set the display to either Celsius or Fahrenheit.

This group of parameters is accessed by input code 155. Figure 10 is the flow chart that shows how they can be changed.

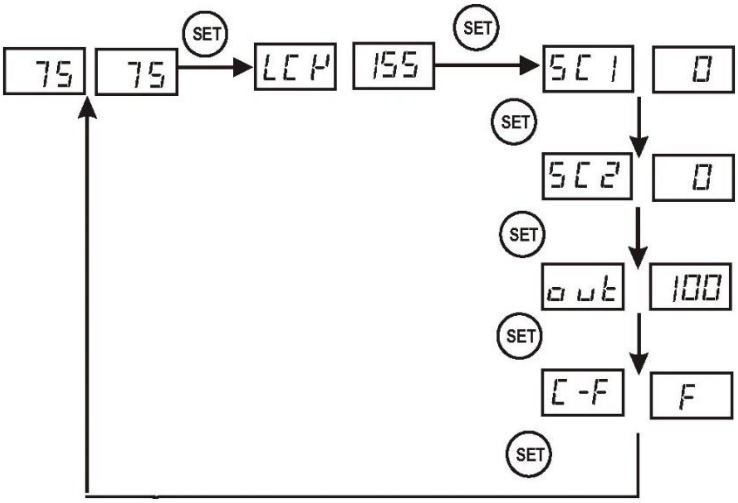

Figure 10. Code 155 Parameter setup flow chart

Press and hold SET key for 4 second until the left window displays “LCK”. Release the SET. The right window will show “0”. Use “+” and “-” keys to adjust the display to 155 (another pass code) and press SET. The left window will show the parameter and right window will show its value. Use “+” and “-” keys to change the setting. When finished, press the SET to confirm the change. The next parameter will be displayed.

3) The third group is about the alarm. The alarm setting can be accessed by code 188. Table 4 shows the list of the parameters, their range and initial set values.

Table 4. List of control parameters and its initial settings under code 188

Symbol	Description	Range	Initial
AH1	Probe 1 high limit alarm	0-200 °C, 0-392 °F	290
AL1	Probe 1 low limit alarm	0-200 °C, 0-392 °F	0
AH2	Probe 2 high limit alarm	0-200 °C, 0-392 °F	200
AST	Step finish alarm	On, OFF	ON

Details of each parameter.

a) AH1, this is the high limit alarm for probe 1. Users can set the temperature so that if the system is out of control, the buzzer will be turned on. e.g. If AH1 is set to 290, the buzzer will turn on at 291 and off at 290. When the buzzer is on, the left window will flash between AH1 and the current temperature.

b) AL1 is the low limit alarm for probe 1. e.g. If AL1 is set to 100, the buzzer will be on when temperature drops to 100. It will turn off when the temperature reaches 101. This alarm is suppressed when first powered up. It will only function after the temperature has reached the set point once. When the buzzer is on, the left window will flash between AL1 and the current temperature.

c) AH2 is the high limit alarm for probe 2. If AH2 is set to 190, this alarm will be on at 191 and off at 190. When this alarm is on, the right window will flash between AH2 and the current temperature. When smoking multiple pieces of meat with different thicknesses, you can put the probe in the thinnest piece first. Set the alarm to the temperature when the meat is ready. It will let you know when it is done. Then, you can move the probe to the second thinnest pieces and so on. To use this feature, you can set the ending criteria as time. If you set the ending criteria to temperature, you need to set the ending temperature to be higher than the alarm temperature. Please notice that the built-in buzzer is only for Probe 1(AH1 and AL1).
d) AST is the step ending alarm. When AST is turned on, the buzzer will beep 4 times when each step is finished. It is useful to notify the user the cooking step is finished. User can turn it off if no buzzer sound is wanted at the finish of each step.

Note: **All alarms can be cancelled/muted by pressing the "-" key.**

This group of parameters is accessed by input code 188. Figure 1 is the flow chart that shows how they can be changed.

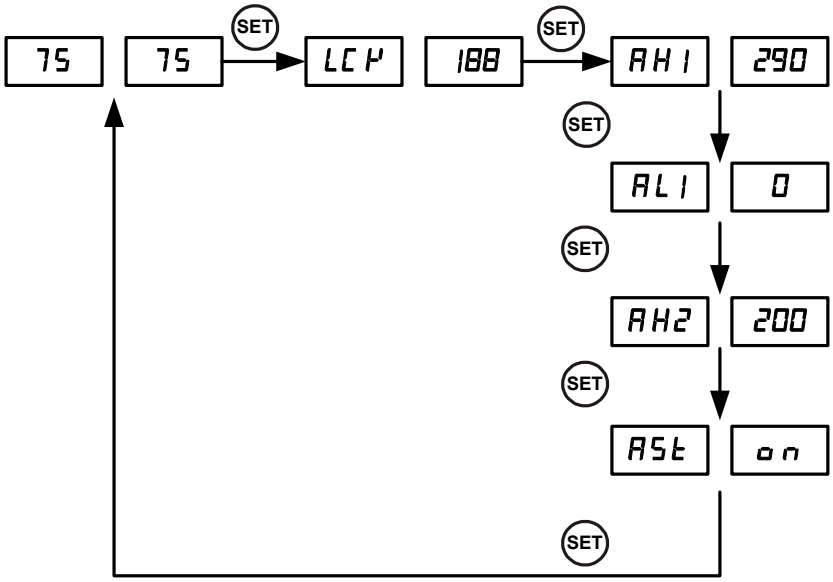

Figure 81. Code 188 Parameter setup flow chart

Press and hold SET key for 4 second until the left window displays "LCK". Release the SET. The right window will show "0". Use "+" and "-" keys to adjust the display to 188 (pass code) and press SET. The left window will show the parameter and right window will show its value. Use "+" and "-" keys to change the setting. When finished, press the SET to confirm the change. The next parameter will be displayed.

8. Auto-Tune

This section can be ignored if you are using the controller to control the Bradley Smoker because the controller is already set for it.

The controller's most powerful feature is its ability to regulate virtually any cooker with stable temperature control. For stable temperature control the controller requires two things; (1) the controller must be set to the correct power level and, (2) it must be *tuned* to the cooker being used. Tuning is the process that matches the control characteristics of the controller to the heating characteristics of the cooker. The controller is said to be tuned to the cooker when its memory is programmed with values telling it how fast the cooker warms up, cools off, and how efficiently it transfers heat. For example, consider the difference between a heat lamp and a hot plate. When electricity is applied to a heat lamp it begins to heat instantaneously, and when it's turned off it stops heating instantaneously. In contrast, a hot plate may take several minutes to begin heating when electricity is applied and even longer to start cooling when electricity is turned off. But, to do this it must be programmed with the time constants. Describing how fast the heater heats when electricity is turned on and how fast it begins to cool when it's turned off. These time constants are called the *tuning parameters.*

Every type of cooker has its own unique set of tuning parameters. For the controller to heat with stability, it must be programmed with the tuning parameters for the cooker currently being used.

When Should the Controller be Tuned?

If the PID parameters we provided are not working for your likings, you can use the auto-tuning function to let the controller to determine the PID parameters automatically. The auto-tuning function (it’s often known as self-tuning) can automatically optimize the PID parameters for your chosen cooking system. The auto-tuning function will heat up your cooker then let it cool down. It will repeat this heat/cool cycle several times. Based on the response time of the whole cooking system, the controller will calculate and set the PID parameters for your cooker.

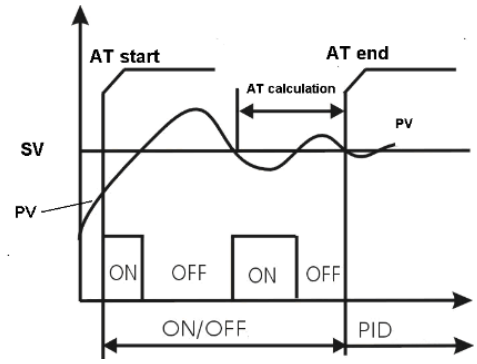

Figure 92. Auto-tune

Before using the auto-tune function, you must set the cooking equipment up in the exact configuration it will be used. For example, to tune a rice cooker, place the sensor in the pot filled with water at room temperature and plug the cooker into the controller. If the cooker has its own thermostat or power control, turn both as high as they'll go. Set the controller to the appropriate power level. Turn the controller and cooker on, and then enter the desired set point temperature close to your normal cooking temperature.

To activate auto-tuning, just enter code 166 to enter the PID setting menu. Set At to 1 then exit the menu (see Figure 9). The display will start to flash alternately between AT and the current water bath temperature, which indicates auto-tuning is in progress. When the display stops flashing, the auto-tuning is finished. Now, the newly calculated PID parameters are set and are used for the system. The new parameters will store in the memory even when the controller is restarted.

You should always write down your old PID parameters, before letting the controller perform auto-tuning. This way if something goes wrong, you can always go back to your old PID parameters. The water amount in the pot should be the same volume as you would have normally used. Basically, you must setup your cooking system close to your actual cooking environment.

The duration of auto-tuning depends on how fast the system is responding to the heating and cooling cycle. If the temperature of the cooker takes a long time to drop when heater is off, the auto-tuning could be a very long tuning process. This is especially true with a well insulated cooker. The auto-tuning should be able to tune most of your chosen heaters/cookers/smokers with great result.

9. Save and recall recipes

This controller can save up to 8 pieces of smoking recipe (programs). Each recipe file can have up to 6 steps (C-1 to C-6). For convenience, we have pre-named these 8 pieces of recipe files as B1 (beef), B2, C1 (chicken), C2, F1 (fish), F2, P1 (pork), and P2. These recipe files are all the same except their names, so you can store your special recipe to any of them. These recipes can be stored in the memory of the controller even when it is powered off. You can overwrite the exist recipe with a new one.

9.1 Save a recipe.

After a program has been entered, the user can save this current program as a recipe for future use. Under the normal operating mode, press and hold SET key for 2 seconds until the left window shows “LCK”. The right window will show “0”. Use the “+” or “-” key to adjust the value to “2” (the passcode for saving the program) and then press SET key to confirm. Then “SAV” will be shown on the left window and “End” on right window. If press SET key now, you will exit this mode without overwriting any existing programs.

Use “+” or “-” key to select the name of recipe to which you want to store the program. If you press “+” (or “-” key) repeatedly, you will see “End”, “b1”, “b2”, “C1”, “C2”, “F1”, “F2”, “P1”, “P2” one by one. Press the SET key again to store your current program under the selected recipe name. This process will overwrite the current recipe data to the saved recipe data. Figure 10 shows the flow chart of how to save a recipe.

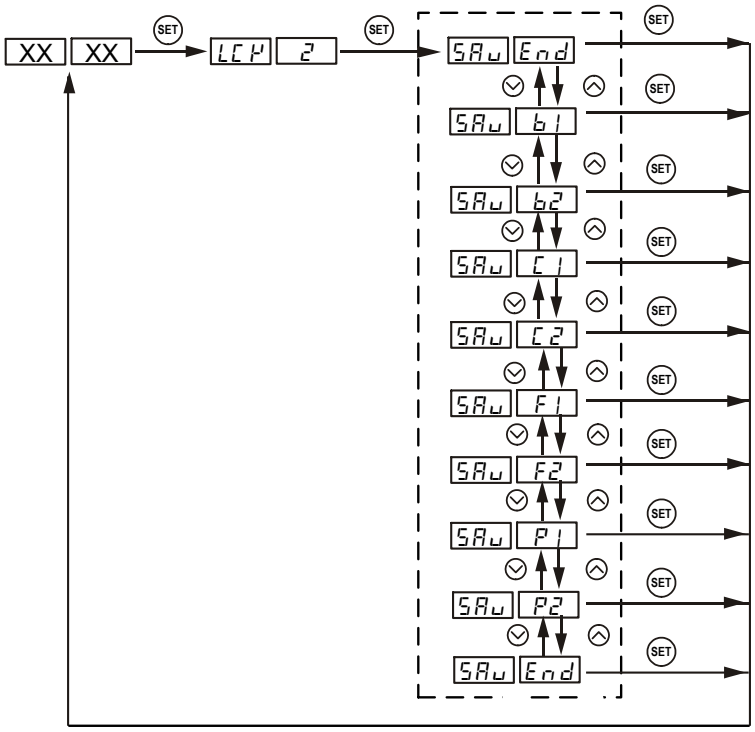

Figure 10. Flow chart of saving a recipe.

9.2 Recall a recipe.

WARNING: You current program will be overwritten by the selected recipe. Please write it down somewhere if it is important to you. To recall a recipe, press and hold SET key for 2 seconds until the left window shows “LCK” and then release the SET key. The right window will show “0”. Use “+” key to adjust the number to “1” and then press SET. Then “rC” (recall) will be shown on the left window and “End” on right window. This can prevent your current program been accidently overwritten by a recalled program. Use “+” or “-” key to locate recipe you want to recall. If you press “+” key repeatedly, you will see “End”, ”b1”, ”b2”, ”C1”, ”C2”, ”F1”, ”F2”, ”P1”, and ”P2” one by one. After you locate the recipe that you want to recall, press the SET key to select. Current program will be overwritten by the selected program. Figure 11 shows the flow chart of how to recall a recipe.

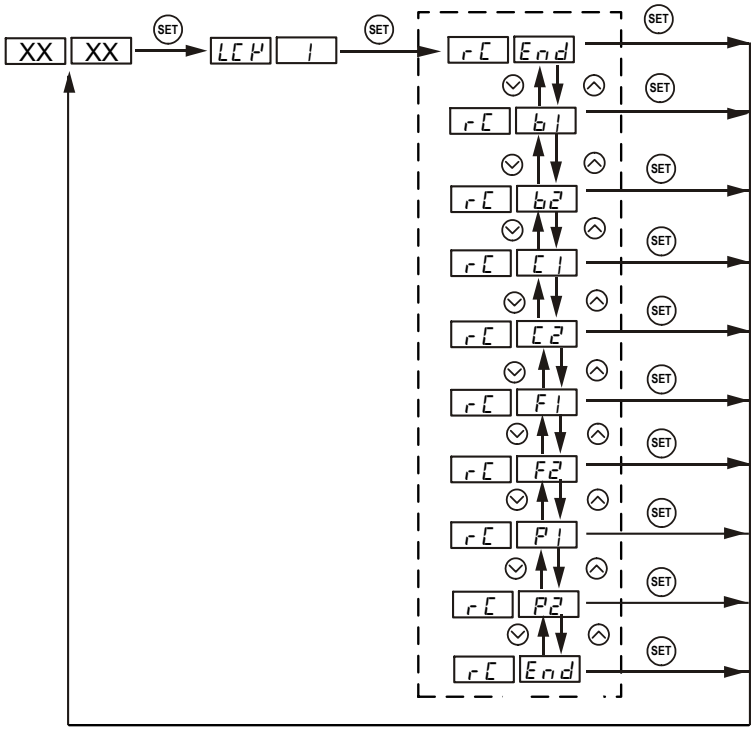

Figure 11. Flow chart of recalling a recipe.

10. Single-step mode

In this mode, the controller will hold temperature at one set value (C-1) continuously as long as the controller is powered on. Even if the controller is powered off and turned on again, it will resume working in this mode. You do not need to enter any other program steps in this mode.

To enter the single-step mode, the user need to set the parameter “PrG” to “off”. Under the normal operating mode, press and hold SET key for 2 seconds until LED display “LCK” on the left window, and then release the SET key. The display on the right window will show “0”. Use “+” key to adjust the number to 3 and press SET key again to confirm. Then “PrG” will be shown on the left window, and “on” or “off” in the right window. Use “+” or “-” key to toggle between “on” to “off”. Select “off” and press SET key if you want to enter the single-step mode. Otherwise, select “on” and press SET key to enter the program mode. The controller will go back to the normal operating mode. To set the temperature, press SET key once, and the left window will show “C-1”. Use “+” or “-” key to adjust the temperature in the right window, then press SET to save and exit. Figure 12 shows the flow chart of how to switch to the single-step mode.

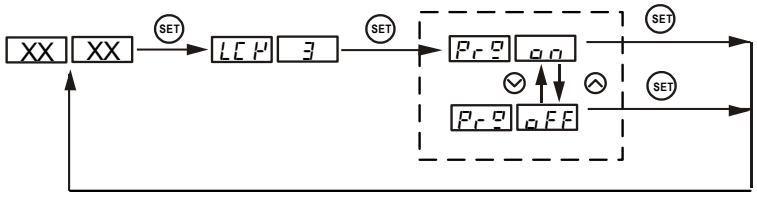

Figure 12. Single-step mode flow chart.

In single-step mode, the save and recall function (Section 9) can still work. But the change can only be applied to C-1, i.e., you can only store your current set temperature to the C-1 in a selected recipe, or recall the C-1 temperature from a selected recipe to the current set temperature. Other data will remain in the memory of controller but is not accessible under the single-step mode. To exit the single-step mode, you only need to change the “PrG” value to “on”.

Note 1: In older versions, it may show PrG options as “y” or “n”, instead of “on”, “off”. To enter single-step mode, please select “n”.

Note 2: Smoke generator socket and settings (R1, R2 parameters) are disabled under single-step mode. You need to power your smoke generator to separate power outlet and control it manually.

11. Examples

a. Store your program as a recipe (Program Mode)

Before you input your program, check the PrG = on (accessed by LCK code “3”). Press SET briefly, and enter the program below:
C-1 = 120, E-1 = t, t-1 = 2.0;
C-2 = 290, E-2 = F, F-2 = 160;
C-3 = 130, E-3 = t, F-3 = 30.0.
You can leave the rest of steps as their default values.

To store in program to recipe b1, long press SET key, set LCK=2, choose b1, and press SET again to confirm and exit. Now the controller is back to the normal operating mode. It will run on this current program, which has just been saved as recipe b1.

b. Recall a recipe to the current program (Program Mode)

Before you input your program, check the PrG = on (accessed by LCK code “3”). Long press SET, set LCK=2, choose b1, press set to exit.
Then recipe b1 is recalled back as the current program. The controller is back to the normal operating mode and will start run the current program.

c. Store your program as recipe (Single-step Mode)

Before you input your set temperature, check the PrG = off (accessed by LCK code “3”). Press SET key once, and then set C-1=150, press set again to confirm and exit. The controller will go back to the normal operating mode and start running on this single-step program.

To store current program back to recipe b2, long press SET, set LCK=2, choose b2, press set to confirm and exit. Now your current program is stored as recipe b2.

d. Recall your recipe to current program (Single-step Mode)

Before you input your set temperature, check the PrG = off (accessed by LCK code “3”). Long press SET, set LCK=1, choose b2, press set to confirm and exit.
Now the C-1 from the recipe b2 is recalled back to your current program. The controller will start run at this temperature setting.

e. Advanced example

This example will show you how the PrG mode can affect the saved and current recipe/program.

1) Set PrG = on, select “b1” recipe:
C-1 = 120, E-1 = t, t-1 = 2.0;
C-2 = 290, E-2 = F, F-2 = 160;
C-3 = 130, E-3 = t, F-3 = 30.0;

2) Change PrG = off, now the current single-step program is:
C-1 = 120.

3) Set current C-1 to 200, then store current program back to recipe b1. Now the b1 recipe is:
C-1 = 200.

4) Change PrG = on, current b1 recipe is:
C-1 = 200, E-1 = t, F-1 = 2.0;
C-2 = 190, E-2 = F, F-2 = 160;
C-3 = 130, E-3 = t, F-3 = 30.0.

12. Factory reset function

WARNING! This function will restore all the parameters (including receipts in the memory) back to factory default. Please write all the necessary settings down in safe place.

To reset, under the normal operating mode, press and hold SET key for 2 seconds until

LED display “LCK” on the left window, and then release the SET key. The display on the right window will show “0”. Use “+” key to adjust the number to 666 and press SET key again to confirm. The left display will show as “Int” and right display will show as “off”. Press “+” key once to change “off” to “on”. Then press SET key to confirm factory reset. Two displays will show “----” then “8.8.8.8.”. When you see this display back to normal operating mode, factory reset completed. Please check Figure 12 for reset flow chart.

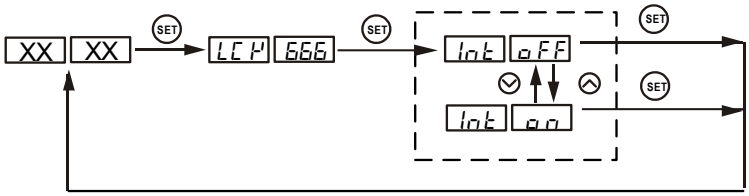

Figure 12. Factory reset flow chart. “on” is to confirm reset, “off” is to cancel reset

Please note: In older versions, it may show Int options as “y” or “n”, instead of “on”, “off”. To reset, please select “y”.

13. Digital filter function

This filter is for rejecting the power line interference. There are two settings, “A” for 50 Hertz interferences, and “b” for 60 Hertz interferences. The default setting is “b” for North America use. If you encounter fast fluctuating temperature reading, and if you are using this controller in a country/region that has 50 Hertz power line, please set it to “A”.

To change this filter for 50 Hz powerline, under the normal operating mode, press and hold SET key for 2 seconds until LED display “LCK” on the left window, and then release the SET key. The display on the right window will show “0”. Use “+” key to adjust the number to 50 and press SET key again to confirm. The left display will show as “FIL” and right display will show as “b”. Press “+” or “-” key once to change “b” to “A”. Then press SET key to confirm and exit.

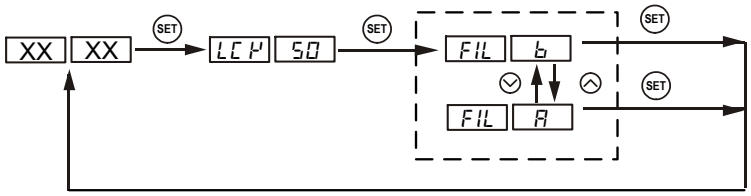

Figure 13. Digital filter flow chart. “b” is for 60 Hz powerline (N. America), “A” is for 50 Hz powerline (International).

Warranty

Auber Instruments warrants this controller console to be free from defects in material and workmanship for a period of one (1) year from the date of the original purchase when utilized for normal household use, subject to the following conditions, exclusions and exceptions. The sensor of the controller is warranted for 90 days. For details, please see Auber warranty policy at auberins.com.

For tech support or return repair request, please contact Auber customer service at auberins.com

Copyright © 2026 Auber Instruments Inc. All rights reserved.

No part of this datasheet shall be copied, reproduced, or transmitted in any way without the prior, written consent of Auber Instruments. Auber Instruments retains the exclusive rights to all information included in this document.

Appendix 1

Managing the heat generated by the controller

The heat dissipation of the controller is directly related to the electric current drawing power of the heater. If your cooker consumes less than 10 ampere of current or your pot is less than 5 gal (19 liters), you do not need to worry about the heat generated by the controller.

Sometimes, the AC current requirement might not be marked on the cooking appliance. To find out how much current it will draw, divide the power (in wattage) by the line voltage, for example, an 1800 watts 120V heater will draw 15 A. A 2000 watts 240 V heater will draw 8.3 Ampere.

Why the heat becomes an issue?

The solid state relay (SSR) used in the controller is a critical component for the precision temperature control. With the SSR, the power can be switched at high speed with no noise and no life time limitation. However, compared with electromechanical relays, SSR's have one drawback. It generates heat when passing current. SSR's are made of semiconductors that have a limited conductance. When the SSR passes current, the heat will be produced from the resistance. Each ampere of current will produce about 1.3 watts of heat. When 12 Amp is passing through the controller, 16 watt of heat is produced in the controller. As more heat is produced, the temperature inside the controller will rise. If it reaches higher than 70 °C, it can shorten the life or even damage some other components in the controller. The temperature inside of the controller depends on the amplitude of the current, how long the controller needs to run at full power and the ambient temperature.

The heat is only an issue during the start of the heating when the heater is running at full power. Once the temperature is close to the set point, the controller will probably need less than 50% of the power to maintain the temperature. Since the heat is directly related to the current passing the controller, the heat produced at steady state will be insignificant and can be ignored.

When the heat becomes an issue?

This controller can run at 10 A continuously without worry of the temperature of the controller. At 12A, the temperature of the controller will increase with time. The bottom of the controller where the heat sink is located can rise by 63F (35 C) from ambient if running at full power continuously for 90 minutes. For this reason we don't recommend running the controller at full power for more than 90 minutes. For 120 VAC, 15 A for 90

minutes will provide enough energy to heat 10 gallons (38 liters) of water up by 108 °F (60 °C). If you have a pot that is bigger than 10 gallons and the heater is drawing 15 A, and you need to raise the temperature by 108 °F, you better use one of the methods mentioned below to reduce the heat in the controller. Otherwise, you might damage the controller.

Please note that when the ambient temperature is hot, as it often is the case in some commercial kitchens, the temperature of the controller will get hotter. This is because the heat dissipation is mostly determined by the temperature gradient (the temperature difference between the ambient and the controller) instead of absolute temperature of the controller itself. If the controller reaches 50 °C when the ambient is at 20 °C, it will reach 70 °C when the ambient is at 40 °C.

Solutions to reduce the heat stress on the controller.
1) Use hot water. If you fill the pot with hot water that has a temperature close to the set temperature, the heat dissipation of the controller is not an issue. As we have mentioned, once the temperature is close to the set point temperature, the controller starts to pulse (PWM) the power. The effective current is much lower, making heat not an issue.

2) Limit maximum output power. If you set output reduction parameter to 80%, then, a 15 A heater will become a 12 A heater. It will take 25% longer time to heat up the pot, but the controller will not over heat.

In addition to these solutions, following information will also help you to manage the heat. Place the controller in the right place. The SSR of Auber WS series controller is mounted in the bottom of chassis. The chassis is made of 3 mm thick aluminum for good heat dissipation. Do not cover the controller with any insulation. If you are running at 15 A with a large pot, placing the controller in a well ventilated area and tilting the instrument up with its front legs will help it to remove the heat more efficiently. However, the tilted position may result in water collected at the back frame. Although the controller is splash proof, you should avoid water to be dripped on the controller when you open the lid of the cooker.

Increase the P value. This can only provide limited help for reducing the heat. P is the proportional band. P=200 means the proportional band is 20.0 degrees. When the temperature is raised to less than 20 degree from the set point temperature, the controller will start to reduce the power sooner. But if the integration time is set to very short, the controller might start to run at full power again soon.

Copyright © 2026 Auber Instruments Inc. All rights reserved.

No part of this datasheet shall be copied, reproduced, or transmitted in any way without the prior, written consent of Auber Instruments. Auber Instruments retains the exclusive rights to all information included in this document.